GEPRC Camera Softmount

GEP-Camera Damping Ball – silicone dampers for camera mounting
Hardness 40° · pack of 6



Read this manual before installation. The product contains small parts – keep it out of the reach of children.

Rotorama, s.r.o. · www.rotorama.com

Contents

1. Product description

1.1 What it is for

1.2 Specifications and package contents

2. Use

2.1 Replacing the softmounts

2.2 Inspection, maintenance and storage

3. Information for the EU and Czech Market

3.1 Importer and responsible person in the EU

3.2 Disposal

4. Warranty and rights arising from defective performance

1. Product description

1.1 What it is for

The GEPRC **GEP-Camera Damping Ball** softmounts are flexible silicone dampers on which the camera or camera mount is attached to the drone frame. They absorb vibrations from the motors and propellers and reduce their transmission to the FPV or HD camera. The result is a steadier image without the so-called “jello” effect (wobbling and shaking of the image).

The pack contains replacement softmounts with a hardness of 40°, which the manufacturer uses on the **GEPRC CineLog20, CineLog25 V2 and CineLog35 V2** frames; for this variant the manufacturer also lists the **CineLog30**. The softmounts are also suitable for your own (DIY) builds, provided the hole sizes and plate thickness match the data in Chapter 1.2.



Softmounts (highlighted in blue) in the camera mount of a GEPRC drone

1.2 Specifications and package contents

Product designation	GEP-Camera Damping Ball (hardness 40°)
Manufacturer	GEPRC
Material	silicone
Hardness	40°
Height	10.5 mm
Outer diameter (ball section)	6.5 mm
Flange diameter	5 mm
Neck (groove) diameter	3 mm
Groove width	1.5 mm
Inner hole diameter	1.32 mm
Weight	less than 0.1 g / pc
Package contents	6× softmount
Not included	camera, camera mount, frame, screws or tools

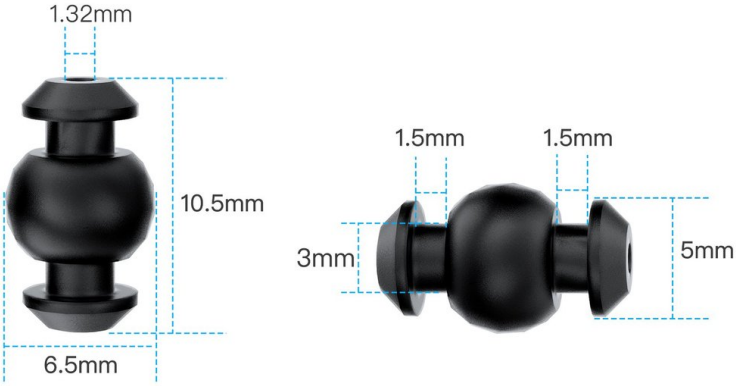

Softmount dimensions according to the manufacturer (values in mm)

2. Use

2.1 Replacing the softmounts

The softmount is inserted into a hole in the frame plate or camera mount so that the plate sits in its groove between the ball section and the flange. Replacement procedure:

① Disconnect the battery from the drone.

② Following the frame instructions, release the camera or, if necessary, the whole camera mount so that the softmounts are accessible.

③ Push the old softmount out of the hole – squeeze the flange with your fingers and pull it through the hole. Do not use sharp tools, as they could damage the frame and cables.

④ Insert the new softmount with its flange into the hole in the first plate and gently pull it through until the plate snaps into the groove.

⑤ Fit the second plate or mount onto the opposite flange in the same way.

⑥ Check that all softmounts sit straight in their grooves, are not twisted or torn, and that the camera does not touch the frame or other parts anywhere.

⑦ Reassemble the camera and connect the battery only after installation is complete.

※ Always replace all softmounts of one mount at the same time so that they have the same hardness and the same wear. Otherwise the camera may tilt and damping will be uneven.

2.2 Inspection, maintenance and storage

- Check the softmounts after every crash and regularly during drone maintenance. Replace a torn, cracked or stretched softmount immediately – the camera could come loose.
- If shaking or the “jello” effect reappears in the image, check the condition of the softmounts as well as the propellers and motors.
- Do not clean the softmounts with solvents or aggressive cleaning agents. Remove dirt with a dry or slightly damp cloth.
- Store spare softmounts in a dry place, away from direct sunlight and heat sources.
- Keep small parts out of the reach of children – they could be inhaled or swallowed.

3. Information for the EU and Czech Market

3.1 Importer and responsible person in the EU

The product is placed on the European Union market by the importer stated below, who is at the same time the responsible person within the meaning of Article 16 of Regulation (EU) 2023/988 of the European Parliament and of the Council on general product safety (GPSR).

Importer / responsible person in the EU	Rotorama, s.r.o.
Company ID (IČO)	051 57 692
VAT ID (DIČ)	CZ05157692
Registered office	Okrajová 1351, 674 01 Třebíč, Czech Republic
E-mail	info@rotorama.cz
Phone	+420 252 252 098
Website	www.rotorama.com

3.2 Disposal

- The softmounts are made of silicone and contain no electronics or batteries. They are not electrical equipment and are therefore not subject to the take-back of electrical equipment.
- Dispose of worn softmounts in accordance with the waste sorting rules of your municipality. Sort the packaging according to its material.
- The waste management rules of the country and municipality in which you dispose of the product are decisive.

4. Warranty and rights arising from defective performance

The rights and obligations of the contracting parties are governed by Czech law, in particular by Act No. 89/2012 Coll., the Civil Code, and Act No. 634/1992 Coll., on consumer protection.

- The seller is liable to the buyer for the product being free of defects on receipt. If the buyer is a consumer, a defect may be notified **within two years of receipt** of the product (Section 2165 of the Civil Code).
- If a defect appears within **one year** of receipt, the product is deemed to have been defective already at the time of receipt (Section 2161(5) of the Civil Code).
- When purchasing online, a consumer has the right to **withdraw from the contract within 14 days** of receiving the goods without giving a reason (Section 1829 of the Civil Code).
- Claims should be made with the retailer from whom you purchased the product. The importer's contact details are given in Chapter 3.1.
- The competent body for out-of-court settlement of consumer disputes is the **Czech Trade Inspection Authority**, Štěpánská 796/44, 110 00 Prague 1, www.coi.cz.