Cube Orange+

Flight controller (FC) for unmanned aircraft
Standard Set · Mini Set · standalone module



Read the entire manual and the safety instructions carefully before assembly and first use. The product is intended for persons over 14 years of age.

Rotorama, s.r.o. · www.rotorama.com

Contents

1. Safety Instructions

1.1 Before You Start

1.2 Motors, Propellers and Operation

1.3 Power Supply and Li-Po Batteries

1.4 Operating Environment

2. Description and Specifications

2.1 Variants and Package Contents

2.2 Flight Controller Architecture

2.3 Cube Orange+ Specifications

2.4 Sensors and IMU Board

2.5 Operating Conditions

2.6 Mechanical Design and Connectors

2.7 Cover Versions

3. Cube Orange+ Interfaces, Outputs and Power

3.1 PWM Outputs

3.2 Serial Ports

3.3 RC Inputs, S.Bus Output and RSSI

3.4 I2C, CAN and SPI

3.5 Analog Inputs and Power Monitoring

3.6 Buzzer, LED and Safety Switch

3.7 Power Sources and Priority

3.8 Peripheral Power, Servo Rail, USB

4. Carrier Boards and Accessories

4.1 Standard Carrier Board with ADS-B Receiver (Standard Set)

4.2 Standard Carrier Board Dimensions

4.3 Standard Carrier Board Connector Layout
4.4 Standard Carrier Board Pinouts
4.5 Mini Carrier Board (Mini Set)
4.6 Switching the RC Input to Spektrum (Mini Carrier Board)
4.7 Power Brick Mini and I2C Board (Standard Set and Mini Set)
4.8 DF17 Connector – Pin Assignment
5. Legal Operating Conditions in the Czech Republic and the EU
5.1 The Law of the Country Where You Fly Is Decisive
5.2 The Flight Controller as Part of an Unmanned Aircraft
5.3 Radio Equipment
6. Installation, Wiring and Configuration
6.1 Mounting in the Model
6.2 microSD Card
6.3 Power Supply – Power Brick Mini
6.4 Electronic Speed Controllers (ESC) and Motors
6.5 GPS and Compass
6.6 RC Receiver and Telemetry
6.7 Ground Station and Computer Connection
6.8 Firmware Installation
6.9 Accelerometer and Compass Calibration
6.10 RC Transmitter, Flight Modes and Servos
6.11 Electronic Speed Controller Calibration (PWM ESC)
6.12 Battery Monitoring and IMU Heating
6.13 ADS-B Receiver (Standard Set)
6.14 External ADS-B Receiver (Mini Set and Module)
6.15 Two GPS Modules (GPS Blending)
7. Operation, Maintenance and Troubleshooting

7.1 Pre-Arm Checks and Arm
7.2 First Flight
7.3 LED Indications and Tones (ArduPilot)
7.4 Maintenance and Storage
7.5 Troubleshooting
7.6 USB Drivers in Windows
7.7 Firmware Recovery via SWD
8. Information for the EU and Czech Market
8.1 Importer and responsible person in the EU
8.2 Product conformity
8.3 Disposal of electrical equipment
9. Warranty and rights arising from defective performance

1. Safety Instructions

1.1 Before You Start

Cube Orange+ is a flight controller (FC, autopilot) for unmanned aircraft, multicopters, VTOLs, boats and ground robots running ArduPilot or PX4 firmware. Incorrect wiring or configuration can lead to loss of control of the vehicle and to personal injury or property damage.

- Before assembly, read the entire manual and the documentation of the firmware used (ArduPilot / PX4).
- The product is not a toy and is intended for persons **over 14 years of age**. Installation and configuration should be carried out by a user experienced with unmanned aircraft electronics.

1.2 Motors, Propellers and Operation

- **Always remove the propellers** during any configuration, electronic speed controller (ESC) calibration and bench testing.
- The motors can spin up immediately after Arm (enabling the motors) – even unexpectedly, e.g. if outputs or RC transmitter channels are assigned incorrectly.
- Before the first flight, check the motor order and direction of rotation and the servo response. No people or obstacles may be within **50 m** during operation.
- Never disable the pre-arm checks (Arming Checks). The manufacturer explicitly prohibits flying with ARMING_CHECK set to anything other than 1 – if the vehicle refuses to arm, eliminate the cause first.

1.3 Power Supply and Li-Po Batteries

- Cube Orange+ and the carrier boards are powered with a regulated voltage of approximately 5 V from the power module (Power Brick Mini) or another suitable source. **Do not connect the battery directly** to the power inputs of the carrier board.
- The Cube does not power the servo rail. Servos need a separate power source (BEC or ESC with a 5 V output).
- Charge Li-Po/LiHV batteries only with a suitable charger, under supervision, on a non-flammable surface. Full charge: 4.20 V per Li-Po cell, 4.35 V per LiHV cell; land at 3.5 V per cell at the latest; store at 3.8 V per cell. Do not use damaged or swollen batteries.

1.4 Operating Environment

- Cube Orange+ and both carrier boards are **not waterproof** – protect them from humidity and rain. Recommended operating temperature: −10 °C to 55 °C; beware of condensation in freezing conditions.

2. Description and Specifications

2.1 Variants and Package Contents

This manual applies to three variants sold by Rotorama. They differ in the carrier board onto which the Cube Orange+ module is mounted and in the accessories included.

Item	Standard Set	Mini Set	Module
Cube Orange+ flight controller	1×	1×	1×
Carrier board	Standard Carrier Board with ADS-B	Mini Carrier Board	—
Power Brick Mini power module	1×	1×	—
I2C expansion board (I2C Board)	1×	1×	—
Power Brick Mini cable	1×	1×	—
GPS1 cable	1×	1×	—
CAN cable	2×	2×	—
I2C cable	2×	2×	—
Buzzer cable	1×	1×	—
Micro USB cable	1×	1×	—
Screw set	1×	1×	—
Set of double-sided adhesive pads	1×	—	—

The **standalone module** is supplied without a carrier board. Operation requires a compatible carrier board with the standard 80-pin Hirose DF17 connector (e.g. Standard Carrier Board, Mini Carrier Board, Kore Carrier Board or a board designed by the drone manufacturer according to the CubePilot reference design).

2.2 Flight Controller Architecture

Cube Orange+ combines two functional units in one aluminium housing: the main control unit (FMU) and the I/O coprocessor. Connectors and power are handled by the carrier board, to which the module is connected by a single 80-pin Hirose DF17 connector. The module has no power management or BEC of its own.

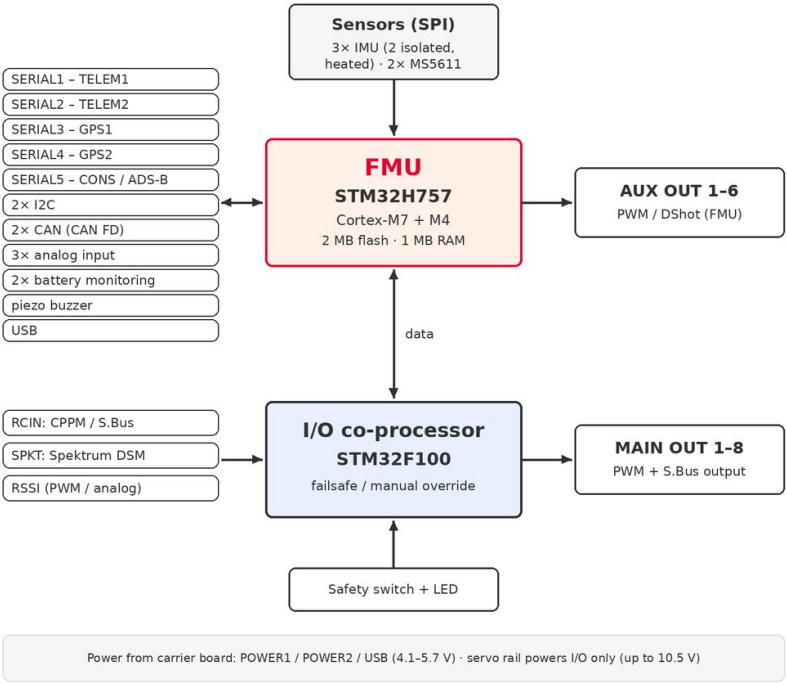

Cube Orange+ block diagram

- **FMU** – STM32H757 processor (ARM Cortex-M7 + Cortex-M4), 2 MB flash, 1 MB RAM. Processes sensors, navigation and communication and drives outputs AUX OUT 1–6.
- **I/O coprocessor** STM32F100 – drives outputs MAIN OUT 1–8 and the RC inputs. If the FMU fails, it can drive the outputs directly from the RC input (failsafe / manual mode on planes).
- All flight sensors are connected via SPI; the microSD card via the SDIO interface.
- The power monitoring pins (Brick OK, Backup OK, FMU 3.3 V) are routed to the I/O coprocessor through a 220 Ω resistor – power events can be logged even if the FMU restarts in flight.

2.3 Cube Orange+ Specifications

Parameter	Value
Main processor (FMU)	STM32H757 (Cortex-M7 + M4), 2 MB flash, 1 MB RAM
I/O coprocessor	STM32F100
IMU	3× (accelerometer + gyroscope), 2 vibration-isolated and heated – see 2.4
Barometers	2× MS5611 (one on the IMU board, one on the FMU)
Built-in magnetometer	AK09916 (part of the ICM20948 IMU)
PWM outputs	14 (8 from I/O – MAIN, 6 from FMU – AUX)
RC inputs	CPPM, S.Bus, Spektrum/DSM; RSSI input (PWM/analog)
S.Bus output	yes (SBUSo port)
Serial ports	5 (2 with full flow control) + USB
I2C	2 (external)
CAN	2 (CAN FD)
SPI	1 (unbuffered, for short wires only)
Analog inputs	3
Other	piezo buzzer driver, external RGB LED (I2C), safety switch + LED, microSD slot
Carrier board connector	Hirose DF17, 80 pins, 4 mm stacking height, 0.5 mm pitch
Power supply – recommended	4.0–5.5 V (manufacturer specifies 4.1–5.5 V / 350 mA at 5 V)
Power supply – absolute maximum	3.8–5.7 V
FMU + I/O consumption	550 mA budget including LED and buzzer
Housing dimensions	38.2 × 38.2 mm, mounting hole spacing 30 × 30 mm
Waterproofing	not waterproof
Firmware	ArduPilot (target CubeOrangePlus), PX4

2.4 Sensors and IMU Board

Cube Orange+ uses the third version of the vibration-isolated IMU board. The sensors fitted differ depending on the production revision:

Sensor	Fitted	Mounting
IMU1	ICM45686 or ICM20649	isolated board
IMU2	ICM20948, ICM42688 or ICM45686	isolated board

Sensor	Fitted	Mounting
IMU3	ICM42688 or ICM45686	rigidly on FMU
Barometer 1	MS5611	IMU board
Barometer 2	MS5611	FMU

- IMU1 and IMU2 are mechanically isolated from vibration; IMU3 is not isolated. The “data ready” signals of the sensors on the isolated board are not brought out.
- The IMU board is heated by built-in resistors to an adjustable temperature (parameter BRD_HEAT_TARG, see 6.12).

2.5 Operating Conditions

Parameter	Value
Supply voltage / max. current	4.1–5.5 V / 350 mA at 5 V supply
Ideal operating temperature	−10 °C to 55 °C
Max. emergency operating temperature	100 °C
Lowest tested storage temperature	−70 °C
Highest tested temperature (survived and restarted)	120 °C
Lowest power-on temperature	approximately −40 °C to −50 °C
Waterproofing	not waterproof, external protection required

※ When operating in freezing conditions, beware of condensation. The manufacturer strongly recommends preheating the module before start-up so that the system operates within an acceptable temperature range.

2.6 Mechanical Design and Connectors

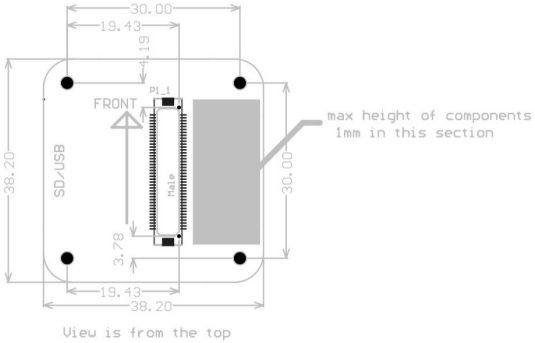

Cube module dimensions, top view (FRONT – front side, SD/USB – side with the microSD slot and USB)

- Housing 38.2 × 38.2 mm, mounting hole spacing 30 × 30 mm. The arrow on the cover indicates the front.
- Hirose DF17 interconnect, 80 positions, 4 mm stacking height, 0.5 mm pitch, drop-resistant.
- Carrier board connector series (CubePilot standard): servo rail 0.1″ (2.54 mm), AWG24 wires; peripherals JST-GH 1.25 mm, AWG28 wires; power inputs Molex CLIK-Mate 2 mm.
- The microSD slot and the micro USB port are on the side of the module.

2.7 Cover Versions

Cube Orange+ is supplied in two versions that differ only in the cover print. **Version 1:** CubePilot logo with a forward arrow and the Cube+ mark on top, bottom cover without print. **Version 2:** additionally the inscriptions “DIU Blue Listed NDAA Compliant” and “Design in Australia; Proudly made in Taiwan”, the latter also on the bottom cover. Functions, components and specifications are identical.

3. Cube Orange+ Interfaces, Outputs and Power

This chapter describes the interfaces of the Cube Orange+ module itself. Which of them are brought out to connectors depends on the carrier board (chapter 4).

3.1 PWM Outputs

Property	MAIN OUT 1–8	AUX OUT 1–6
Driven by	I/O coprocessor	FMU
Function in failsafe / on FMU failure	yes – can be driven directly from the RC input	no
Latency	standard	lower
Frequency groups (ArduPilot)	1–2 · 3–4 · 5–8	1–4 · 5–6
Max. PWM update rate	400 Hz	—
DShot	after setting BRD_IO_DSHOT = 1	yes
Use as GPIO	yes	yes (relays, buttons, RPM)
On Mini Carrier Board	yes (1–8)	no

- Channels in the same group must use the same output frequency. If one channel of a group uses DShot, the whole group must use DShot. When combining servos and motors in a group, choose a frequency the servos can handle.
- Enabling DShot on MAIN OUT (BRD_IO_DSHOT = 1, then restart) stops the RCIN input from receiving PPM, DSM, iBus, SUMD, SRXL and ST24. S.Bus and FPort on RCIN and DSM receivers on the SPKT port continue to work.
- The PWM outputs are **not power outputs**. One I/O output can handle 50 mA, all eight together at most 100 mA. They are intended only for servos and ESC inputs, not for relays or LEDs.
- The outputs are output-only, ESD-protected and designed to survive accidental incorrect connection of a servo. The drivers are rated for a 50 pF load over 2 m of 26 AWG cable.
- The PWM signal level is 3.3 V. On the servo rail, the top row is GND, the middle row +5 V (servo power) and the bottom row signal.
- In ArduPilot, outputs AUX 1–6 have pin numbers 50–55 when used as GPIO.

3.2 Serial Ports

ArduPilot	Port	UART	Note
SERIAL0	USB	—	console, connection to a computer
SERIAL1	TELEM1	UART2	RTS/CTS, default 57,600 baud
SERIAL2	TELEM2	UART3	RTS/CTS
SERIAL3	GPS1	UART4	+ I2C1, safety switch
SERIAL4	GPS2	UART8	+ I2C2
SERIAL5	CONS	UART7	ADS-B receiver on the board with ADS-B

- The serial ports use 3.3 V CMOS logic levels, are 5 V tolerant, buffered and ESD-protected.
- Only SERIAL1 and SERIAL2 have full flow control (RTS/CTS).
- The CONS port was originally a debug console; it is now a regular UART (debug output goes via USB).

3.3 RC Inputs, S.Bus Output and RSSI

- **RCIN** – input at the end of the servo rail, supports all RC protocols (CPPM/PPM, S.Bus, FPort and others). A receiver with PWM output requires a PPM encoder.
- **SPKT** – port for Spektrum DSM / DSM2 / DSM-X satellite receivers with its own 3.3 V regulator (receiver draw around 25 mA); the power is software-controlled, which enables binding (bind).
- **SBUSo** – output of all servo channels via S.Bus from the I/O coprocessor, enabled with parameter BRD_SBUS_OUT. The 5 V pin of this port is connected to the servo rail.
- **Analog RSSI** – with BRD_SBUS_OUT = 0, the SBUSo port can be used as an RSSI input (RSSI_TYPE = 1, RSSI_PIN = 103). The S.Bus output and the RSSI input cannot be used at the same time.
- The S.Bus and CPPM receiver power has its own supply. **Do not connect servos** or onboard computers to it (manufacturer service bulletin SB_0000004).

3.4 I2C, CAN and SPI

- **I2C** – two buses, directly driven, unbuffered, with pull-up resistors to 3.3 V in the FMU. Two buses allow two GPS/compass modules to be connected without compass conflicts.
- **CAN** – two CAN FD buses, transceivers in the FMU. The termination resistor for one end of the bus is fixed on the board.
- **SPI** – unbuffered, for very short wires only; on the standard board brought out to test points only. The manufacturer does not recommend using it.

3.5 Analog Inputs and Power Monitoring

Analog inputs 1–3 are protected up to 12 V, but the measuring range is 0–3.3 V. Pin numbers for ArduPilot:

Pin	Measured quantity
14	main battery voltage (POWER1)
15	main battery current (POWER1)
13	second battery voltage (POWER2)
4	second battery current (POWER2)
18	Vdd 5 V supply
8	ADC port
103	RSSI (analog)
9 / 5	EXTERN_GPIO1 / EXTERN_GPIO2 (custom carrier board only)

3.6 Buzzer, LED and Safety Switch

- The piezo buzzer driver can drive most piezo elements with a capacitance of 5–300 nF at up to 35 V. It is very loud; the volume is limited only by the sensitivity of the element used.
- An external RGB LED is connected via I2C (e.g. in a GPS module). The Cube module has a built-in RGB LED and a Boot/Error LED.
- The safety switch and its LED are connected via the GPS1 port (pins BUTTON and IO_LED_SAFETY).

3.7 Power Sources and Priority

Power management has been moved from the FMU to the carrier board. Power can be supplied from the power module (POWER1, with POWER2 as backup), from the servo rail or from USB. Each input is protected against reverse polarity and against back-feeding from the other sources. If several sources are connected, the source with the highest priority and a valid voltage is used; the power module port is preferred.

Source	Priority	Normal range	Limit	Protected up to
Power module	high	4.8–5.4 V	4.1–5.7 V	0–20 V
Servo rail	medium	4.8–5.4 V	4.1–10 V	0–20 V
USB	low	4.8–5.4 V	4.1–5.7 V	0–6 V

Input voltage range of the individual sections by source:

Section	Module port	Backup port	USB	Servo rail
FMU	4–5.7 V	4–5.7 V	4–5.7 V	—

Section	Module port	Backup port	USB	Servo rail
I/O	4–5.7 V	4–5.7 V	4–5.7 V	4–10.5 V
Peripherals	4–5.7 V, max. 2.5 A	4–5.7 V, max. 2.5 A	4–5.7 V, max. 2.5 A	—

3.8 Peripheral Power, Servo Rail, USB

- **Peripherals** receive at most 5.5 V through ESD and EMI filters. Peripheral power is disconnected if the voltage drops below 2.7 V or rises above approximately 5.7 V. Total peripheral current is limited to 2.5 A.
- **TELEM1** has its own 1.5 A current limit and a separate filter; the other peripherals share a 1 A limit and one switch (peak at most 1.5 A). Both groups are switched by software.
- **The backup input (POWER2)** is wired the same as the main one. Above 5.7 V the power is blocked. When powered from the backup input, the Cube and peripherals can draw up to 2.75 A in total if the source can supply it.
- **Servo rail** – the I/O accepts up to 10.5 V from the servo rail and switches to it if the main power fails (manual control of a plane, if the I/O is mapped correctly). The FMU and peripherals are not powered from the servo rail. If there is more than 5.7 V on the servo rail and the power module is missing, the system remains unpowered. **The Cube never powers servos.**
- **USB** is used for configuration, firmware updates and testing; keep the total draw including peripherals within 500 mA. Powering from USB in flight is not recommended.
- Peripheral power is blocked in hardware against short circuits; the block is released by the FMU software. In undervoltage, the supervisor circuit holds the FMU in reset.
- The FMU and I/O have their own 3.3 V regulators with power-on reset. The real-time clock and SRAM are backed up by a capacitor that allows proper recovery after an unexpected power loss or restart in flight; the module contains no battery.
- The FMU measures voltage and current from both power modules as well as the unregulated 5 V supply (undervoltage detection); the I/O measures the servo rail voltage.
- The Cube module itself has only minimal electrical protection – observe the voltage and current limits. The carrier board inputs have EMI filters and TVS diodes, reverse polarity and ESD protection; digital signals have protective buffers and series resistors. On custom carrier boards, provide adequate ESD protection.

※ Manufacturer warning: never power radio devices (telemetry, transmitters) from the carrier board connectors. Power only a standard RC receiver from the RCIN power pin.

4. Carrier Boards and Accessories

4.1 Standard Carrier Board with ADS-B Receiver (Standard Set)



Cube Orange+ on the Standard Carrier Board with ADS-B antenna

The carrier board in the Standard Set is an updated version of the original CubePilot standard board. The specifications and connector pinouts remain the same; changes compared with the original board:

- built-in **uAvionix 1090 MHz ADS-B IN receiver** with integrated antenna,
- Intel Edison footprint and USB debug ports removed,
- new design and corrected CAN port labelling.

The ADS-B receiver detects aircraft transmitting ADS-B OUT and passes their position, altitude, speed and identification to the flight controller; the data can be displayed in the ground station, and alerts and avoidance can be configured in ArduPilot (chapter 6.13). The receiver is connected to the internal serial port SERIAL5 and works with both ArduPilot and PX4.

※ The ADS-B receiver only receives; it does not transmit anything. It does not replace the pilot's obligation to watch the surrounding traffic.

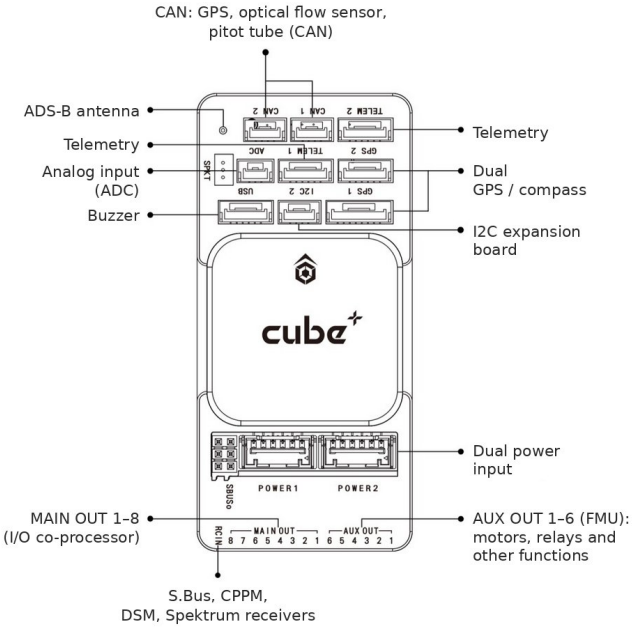

Overview of Standard Carrier Board connectors and functions

4.2 Standard Carrier Board Dimensions

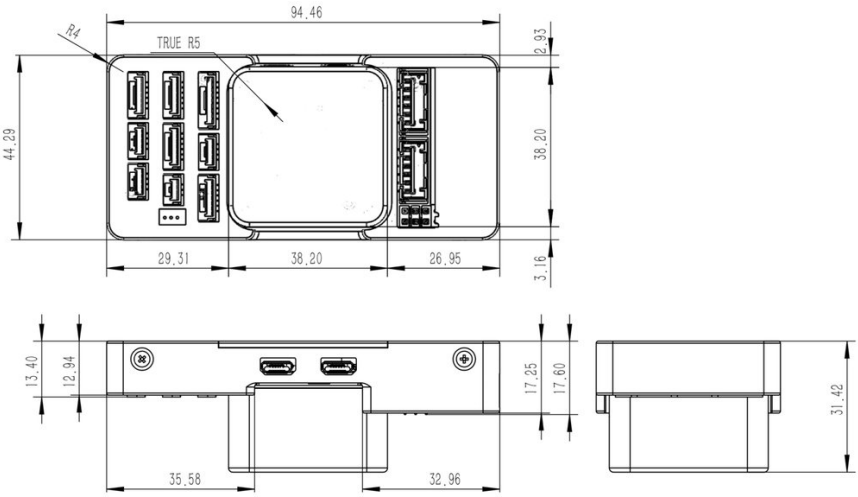

Top and side view (dimensions in mm)

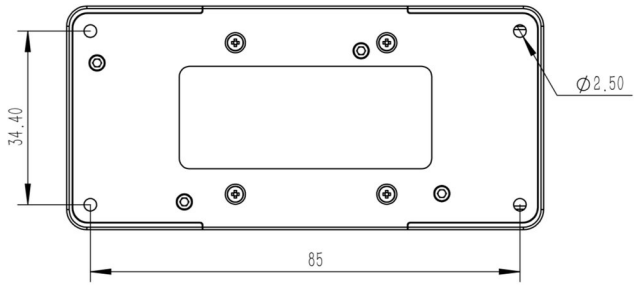

Bottom view – Ø 2.5 mm mounting holes at 85 × 34.4 mm spacing

Standard Carrier Board parameter	Value
Dimensions (L × W)	94.46 × 44.29 mm
Mounting holes	Ø 2.5 mm, spacing 85 × 34.4 mm
Power inputs POWER1/POWER2	4–5.7 V; peripherals max. 2.5 A
Servo rail (I/O power)	4–10.5 V
ADS-B receiver	uAvionix, 1090 MHz, receive only, SERIAL5
Model (Standard Set)	HX4-06222

4.3 Standard Carrier Board Connector Layout

On each connector, pin 1 is marked with a red dot (on the plug side). Pin numbering is shown next to the connectors.

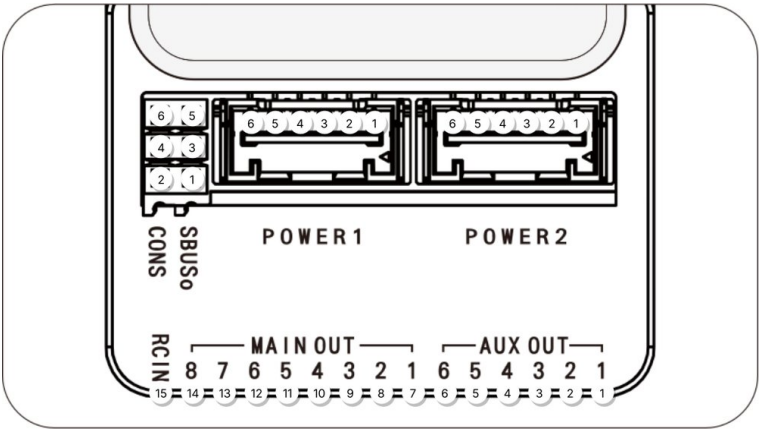

Rear edge: CONS/SBUSo, POWER1, POWER2 and servo rail (positions 1–15)

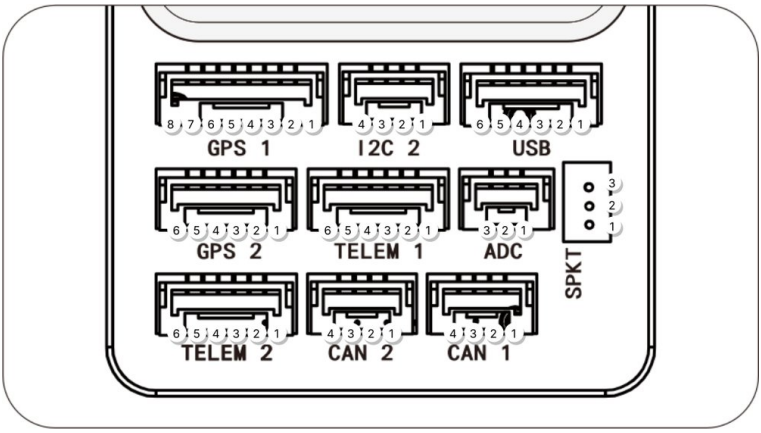

Front edge: GPS1, I2C2, USB, GPS2, TELEM1, ADC, SPKT, TELEM2, CAN2, CAN1

4.4 Standard Carrier Board Pinouts

Wire colours of original CubePilot cables: pin 1 red (or grey), others black, or coloured according to signal type.

▶ POWER1 – main power (Molex CLIK-Mate, 6 pins)

Pin	Signal	Direction	Voltage	Description
1	VDD_5V_BRICK	input	5 V	power from Power Brick
2	VDD_5V_BRICK	input	5 V	power from Power Brick
3	BATT_CURRENT_SENS	input	3.3 V	battery current sensing
4	BATT_VOLTAGE_SENS	input	3.3 V	battery voltage sensing
5	GND	—	GND	ground
6	GND	—	GND	ground

▶ POWER2 – backup power (Molex CLIK-Mate, 6 pins)

Pin	Signal	Direction	Voltage	Description
1	VDD_5V_BRICK	input	5 V	power from Power Brick
2	VDD_5V_BRICK	input	5 V	power from Power Brick
3	AUX_BATT_CURRENT_SENS	input	3.3 V	2nd battery current sensing
4	AUX_BATT_VOLTAGE_SENS	input	3.3 V	2nd battery voltage sensing
5	GND	—	GND	ground
6	GND	—	GND	ground

▶ TELEM1, TELEM2 – SERIAL1, SERIAL2 (JST-GH, 6 pins)

Pin	Signal	Direction	Voltage	Description
1	VCC_5V	output	5 V	peripheral power
2	MCU_TX	output	3.3–5 V TTL	flight controller TX
3	MCU_RX	input	3.3–5 V TTL	flight controller RX
4	MCU_CTS	output	3.3–5 V TTL	CTS (Clear To Send)
5	MCU_RTS	input	3.3–5 V TTL	RTS (Request To Send)
6	GND	—	GND	ground

▶ GPS1 – SERIAL3 + I2C1 (JST-GH, 8 pins)

Pin	Signal	Direction	Voltage	Description
1	VCC_5V	output	5 V	GPS module power
2	GPS_TX	output	3.3–5 V TTL	flight controller TX
3	GPS_RX	input	3.3–5 V TTL	flight controller RX
4	SCL	input/output	3.3 V	I2C1 SCL
5	SDA	input/output	3.3 V	I2C1 SDA
6	BUTTON	input	GND	connected to GND when the button is pressed
7	IO_LED_SAFETY	output	GND	safety switch LED driver
8	GND	—	GND	ground

▶ GPS2 – SERIAL4 + I2C2 (JST-GH, 6 pins)

Pin	Signal	Direction	Voltage	Description
1	VCC_5V	output	5 V	GPS module power
2	MCU_TX	output	3.3–5 V TTL	flight controller TX
3	MCU_RX	input	3.3–5 V TTL	flight controller RX
4	SCL	input/output	3.3–5 V	I2C2 SCL
5	SDA	input/output	3.3–5 V	I2C2 SDA
6	GND	—	GND	ground

▶ I2C2 (JST-GH, 4 pins)

Pin	Signal	Direction	Voltage	Description
1	VCC_5V	output	5 V	peripheral power
2	I2C_2_SCL	input/output	3.3 V (pull-up)	SCL, pull-up in FMU
3	I2C_2_SDA	input/output	3.3 V (pull-up)	SDA, pull-up in FMU
4	GND	—	GND	ground

▶ CAN1, CAN2 (JST-GH, 4 pins)

Pin	Signal	Direction	Voltage	Description
1	VCC_5V	output	5 V	peripheral power
2	CAN_H	input/output	12 V	CAN High
3	CAN_L	input/output	12 V	CAN Low
4	GND	—	GND	ground

▶ USB – external USB, buzzer, LED (JST-GH, 6 pins)

Pin	Signal	Direction	Voltage	Description
1	VBUS	output	5 V	USB power
2	OTG_DP1	input/output	3.3 V	USB D+
3	OTG_DM1	input/output	3.3 V	USB D−
4	GND	—	GND	ground
5	BUZZER_OUT	output	batt. voltage	buzzer output (8.4–42 V per manufacturer)
6	FMU_LED_AMBER	output	—	Boot / Error LED (firmware update)

▶ CONS / SBUSo – SERIAL5 and S.Bus output (2 × 3 header)

Pin	Signal	Direction	Voltage	Description
1	S.Bus_Out	output	—	S.Bus output (TX)
2	MCU_TX	output	3.3–5 V TTL	flight controller TX (SERIAL5)
3	VDD_SERVO	output	servo rail voltage	servo rail voltage
4	MCU_RX	input	3.3–5 V TTL	flight controller RX (SERIAL5)
5	GND	—	GND	ground
6	GND	—	GND	ground

▶ ADC – analog input (JST-GH, 3 pins)

Pin	Signal	Direction	Voltage	Description
1	VDD_5V_Periph	output	5 V	sensor power
2	ADC IN	input	0–3.3 V	pressure sensor, laser rangefinder, sonar
3	GND	—	GND	ground

▶ SPKT – Spektrum DSM (3 pins, pin 3 closest to the Cube module)

Pin	Signal	Direction	Voltage	Description
1	IO_USART1_RX_DSM	input	3.3 V	signal from DSM receiver
2	GND	—	GND	ground
3	VDD_3V3_Spektrum	output	3.3 V	separate receiver power

▶ Servo rail (2.54 mm; top row GND, middle +5 V servo, bottom signal)

Position	Connector	Signal	Description
1–6	AUX OUT 1–6	FMU_CH1–6_PROT	PWM outputs from FMU
7–14	MAIN OUT 1–8	IO_CH1–8_PROT	PWM outputs from I/O
15	RCIN	PPM_SBUS_PROT	PPM / S.Bus input, 3.3 / 4.5 V power

▶ IO DEBUG and FMU DEBUG (JST-SUR, 6 pins, under the carrier board cover)

Pin	Signal	Direction	Voltage	Description
1	VDD 5V PERIPH	output	5 V	power
2	IO_TX / FMU_TX	output	3.3–5 V TTL	TX (FMU: SERIAL5)
3	IO_RX / FMU_RX	input	3.3–5 V TTL	RX (FMU: SERIAL5)
4	SWDIO	input/output	3.3–5 V TTL	SWD interface data
5	SWCLK	input/output	3.3–5 V TTL	SWD interface clock
6	GND	—	GND	ground

4.5 Mini Carrier Board (Mini Set)



Cube Orange+ on the Mini Carrier Board

The Mini Carrier Board is a compact carrier board for builds where space and weight matter. It has fewer outputs than the standard board: according to the manufacturer's documentation, it provides **8 PWM outputs** (MAIN OUT from the I/O coprocessor), only the **CAN2** bus, and has no ADS-B receiver, S.Bus output, ADC port, external USB or CONS port. The micro USB port and the microSD slot are on the Cube module.

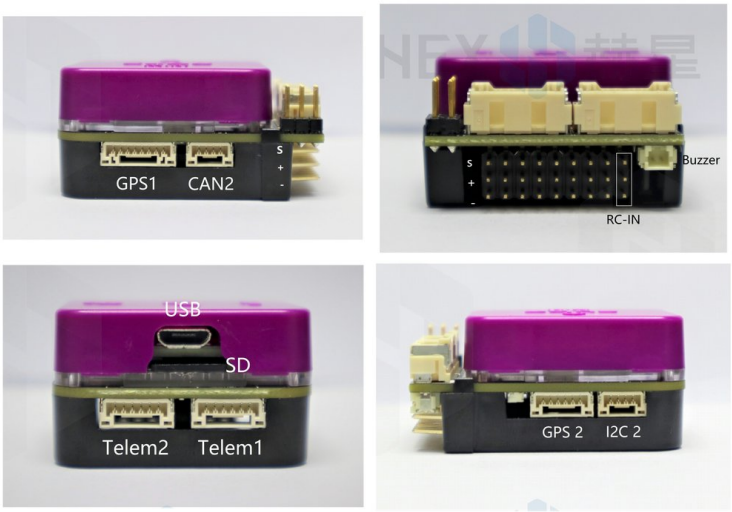

Mini Carrier Board connector layout (manufacturer's illustrative photo with a different Cube module)

Connector	Type	Function
GPS1	JST-GH 8 pins	SERIAL3 + I2C1 + safety switch
GPS2	JST-GH 6 pins	SERIAL4 + I2C2
TELEM1, TELEM2	JST-GH 6 pins	SERIAL1, SERIAL2 with flow control
I2C	JST-GH 4 pins	I2C2 bus
CAN2	JST-GH 4 pins	CAN2 bus
POWER1, POWER2	Molex CLIK-Mate 2 mm, 6 pins	main and backup power + sensing
BUZZER	DF13 1.25 mm, 2 pins	piezo buzzer
RCIN / MAIN OUT 1–8	2.54 mm header	PPM / S.Bus input, PWM outputs 1–8
SPKT	3 pins	Spektrum (only after board modification, see 4.6)

Mini Carrier Board parameter	Value
POWER supply	4–5.7 V / 2.5 A (0–20 V causes no damage, but the system does not operate)
Rated input / output power	14 W
USB input	4–5.7 V / 250 mA
Servo rail (I/O power)	4–10.5 V
Operating temperature	−10 °C to 55 °C

Mini Carrier Board parameter	Value
Dimensions, housing material	47.5 × 38.5 × 17.8 mm, ABS
Waterproofing	not waterproof

The **pinouts** of connectors GPS1, GPS2, TELEM1, TELEM2, I2C, CAN2, POWER1, POWER2 and SPKT are the same as on the Standard Carrier Board (chapter 4.4). Differing connectors:

▶ BUZZER (DF13, 2 pins)

Pin	Signal	Direction	Voltage	Description
1	BUZZER	output	batt. voltage	buzzer (8.4–42 V per manufacturer)
2	GND	—	GND	ground

▶ RCIN / MAIN OUT (2.54 mm header)

Position	Signal	Description
S1–S8	IO_CH1–8_PROT	PWM outputs 1–8 from I/O (3.3 V signal, power from servo rail)
S9	PPM_SBUS_PROT	PPM / S.Bus input (3.3 / 4.5 V power)

The DF17 connector pin assignment of the Mini Carrier Board is the same as on the other Cube carrier boards (chapter 4.8).

4.6 Switching the RC Input to Spektrum (Mini Carrier Board)

As shipped, the RCIN input is wired for PPM and S.Bus: the left middle pad is bridged to the 5V pad (receiver power) and the right middle pad to the PPM/S.B pad (signal). **The SPKT port is therefore not freely available.**

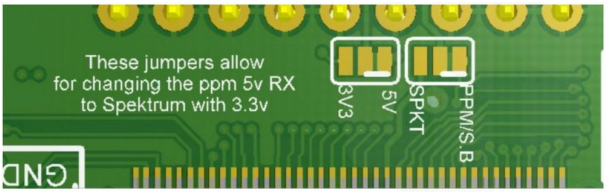

Jumpers for switching the PPM/S.Bus 5 V input to Spektrum 3.3 V

※ This modification alters the board. Afterwards, the RCIN input no longer receives PPM/S.Bus. Carry it out only if you have adequate soldering skills.

① Cut the bridge between the left middle pad and the 5V pad and between the right middle pad and the PPM/S.B pad.

② Bridge the 3V3 pad to the left middle pad and the SPKT pad to the right middle pad with solder.

4.7 Power Brick Mini and I2C Board (Standard Set and Mini Set)

- The **Power Brick Mini** supplies the Cube with regulated voltage via a 6-pin cable to POWER1 and also measures battery voltage and current. According to the manufacturer, it handles batteries up to **8S**, a continuous current of **30 A** and a peak current of **100 A**; it has an XT60 connector on both sides (male to the battery, female to the load). For higher current draw, use a power module with a higher current rating.
- The **I2C Board** is an I2C bus expansion board – it allows several I2C devices (e.g. compass, LED, sensors) to be connected to a single I2C port.

4.8 DF17 Connector – Pin Assignment

The assignment of the 80 pins of the Hirose DF17 connector is a long-standing CubePilot standard – it applies to all Cube carrier boards. This information is needed mainly when designing your own carrier board. Direction is given from the Cube module's perspective.

Pin	Signal	Direction	Description
1	FMU_SWDIO	in/out	FMU SWD data
2	FMU_LED_AMBER	out	Boot/Error LED (FET-switched)
3	FMU_SWCLK	out	FMU SWD clock
4	I2C_2_SDA	in/out	I2C data (SDA)
5	EXTERN_CS	out	external SPI CS (not connected, debug only)
6	I2C_2_SCL	out	I2C clock (SCL)
7	FMU_!RESET	in	FMU reset
8	PROT_SPARE_1	—	spare
9	VDD_SERVO_IN	in	I/O power for emergency failsafe (servo rail)
10	PROT_SPARE_2	—	spare
11	EXTERN_DRDY	in	external SPI interrupt (not connected, debug only)
12	SERIAL_5_RX	in	UART5 RX
13	GND	—	ground
14	SERIAL_5_TX	out	UART5 TX

Pin	Signal	Direction	Description
15	GND	—	ground
16	SERIAL_4_RX	in	UART4 RX
17	SAFETY	—	safety switch input
18	SERIAL_4_TX	out	UART4 TX
19	VDD_3V3_SPEKTRUM_EN	out	Spektrum regulator enable
20	SERIAL_3_RX	in	UART3 RX
21	PRESSURE_SENS_IN	analog	analog input (pressure sensor, rangefinder, sonar)
22	SERIAL_3_TX	out	UART3 TX
23	AUX_BATT_VOLTAGE_SENS	analog	backup battery voltage sensing
24	ALARM	out	buzzer PWM signal
25	AUX_BATT_CURRENT_SENS	analog	backup battery current sensing
26	IO_VDD_3V3	in	I/O chip power (for debugging)
27	VDD_5V_PERIPH_EN	out	peripheral power enable
28	IO_LED_SAFET_PROT	out	safety switch LED
29	VBUS	in	USB VBUS
30	SERIAL_2_RTS	—	UART2 RTS
31	OTG_DP1	in/out	USB D+
32	SERIAL_2_CTS	—	UART2 CTS
33	OTG_DM1	in/out	USB D−
34	SERIAL_2_RX	in	UART2 RX
35	I2C_1_SDA	in/out	I2C data (SDA)
36	SERIAL_2_TX	out	UART2 TX
37	I2C_1_SCL	out	I2C clock (SCL)
38	SERIAL_1_RX	in	UART1 RX
39	CAN_L_2	in/out	CAN Low (FMU)
40	SERIAL_1_TX	out	UART1 TX
41	CAN_H_2	in/out	CAN High (FMU)
42	SERIAL_1_RTS	—	UART1 RTS
43	VDD_5V_PERIPH_OC	in	peripheral power fault
44	SERIAL_1_CTS	—	UART1 CTS

Pin	Signal	Direction	Description
45	VDD_5V_HIPOWER_OC	in	high-power peripheral supply fault
46	IO_USART_1_TX	out	I/O USART1 TX
47	BATT_VOLTAGE_SENS_PROT	analog	main battery voltage sensing
48	IO_USART1_RX_SPECTRUM_DSM	out	signal from Spektrum receiver
49	BATT_CURRENT_SENS_PROT	analog	main battery current sensing
50	FMU_CH1_PROT	out	FMU PWM output 1
51	SPI_EXT_MOSI	out	external SPI, debug only
52	FMU_CH2_PROT	out	FMU PWM output 2
53	VDD_SERVO	in	servo rail voltage sensing
54	FMU_CH3_PROT	out	FMU PWM output 3
55	VDD_BRICK_VALID	in	main power valid signal
56	FMU_CH4_PROT	out	FMU PWM output 4
57	VDD_BACKUP_VALID	in	backup power valid signal
58	FMU_CH5_PROT	out	FMU PWM output 5
59	VBUS_VALID	in	USB valid signal
60	FMU_CH6_PROT	out	FMU PWM output 6
61	VDD_5V_IN_PROT	in	FMU 5 V supply from source selector
62	PPM_SBUS_PROT	in	PPM / S.Bus input
63	VDD_5V_IN_PROT	in	FMU 5 V supply from source selector
64	S.BUS_OUT	out	S.Bus output
65	IO_VDD_5V5	out	I/O 5.5 V supply
66	IO_CH8_PROT	out	I/O PWM output 8
67	SPI_EXT_MISO	in	external SPI, debug only
68	IO_CH7_PROT	out	I/O PWM output 7
69	IO_SWDIO	in/out	I/O SWD data
70	IO_CH6_PROT	out	I/O PWM output 6
71	IO_SWCLK	out	I/O SWD clock
72	IO_CH5_PROT	out	I/O PWM output 5
73	SPI_EXT_SCK	out	external SPI, debug only

Pin	Signal	Direction	Description
74	IO_CH4_PROT	out	I/O PWM output 4
75	IO_!RESET	in	I/O reset
76	IO_CH3_PROT	out	I/O PWM output 3
77	CAN_L_1	in/out	CAN Low (FMU)
78	IO_CH2_PROT	out	I/O PWM output 2
79	CAN_H_1	in/out	CAN High (FMU)
80	IO_CH1_PROT	out	I/O PWM output 1

5. Legal Operating Conditions in the Czech Republic and the EU

5.1 The Law of the Country Where You Fly Is Decisive

Regulations (EU) 2019/947 and 2019/945 apply in all member states of the European Union, but national implementing rules differ from state to state – registration portals, minimum pilot age, geographical zones, mandatory insurance, permitted frequency bands and maximum transmit power. The information in this chapter describes the situation in the Czech Republic. If you operate a drone in another country, you must follow the regulations of the state in which you fly.

5.2 The Flight Controller as Part of an Unmanned Aircraft

Cube Orange+ is a component, not a finished drone. The obligations of the operator and the pilot depend on the vehicle in which you install it:

- A drone built from components has no C0–C6 class identification label. In the open category, it can be operated as a privately built UAS in subcategory **A1** (mass up to 250 g and speed up to 19 m/s) or **A3**; subcategory A2 is not available. Operation beyond these limits falls under the specific category or operation within a model aircraft club.
- The operator of a drone with a camera or with a mass of 250 g or more must register – in the Czech Republic with the Civil Aviation Authority of the Czech Republic (ÚCL) – and display the registration number on the drone. The pilot must hold the appropriate competency.
- In the open category, the main rules are: height up to 120 m above ground, flight within visual line of sight, no flying over assemblies of people; in A3, a distance of 150 m from residential, commercial, industrial and recreational areas.
- Check the geographical zones (in the Czech Republic, the geographical zone map of Air Navigation Services of the Czech Republic (ŘLP ČR)); we recommend taking out liability insurance.

5.3 Radio Equipment

- The ADS-B receiver on the Standard Carrier Board operates at **1090 MHz** and only receives – it has no transmit power.
- The flight controller itself does not transmit. The user is responsible for the configuration and legal operation of connected transmitters (RC, telemetry, video transmitter); outside the Czech Republic, the frequencies and limits of the respective country apply.

6. Installation, Wiring and Configuration

6.1 Mounting in the Model

- Place the carrier board with the Cube as close as possible to the vehicle's **centre of gravity** and secure it with the 3M double-sided adhesive pad and the screws supplied.
- **The arrow on the Cube cover must point forward.** The Cube can also be mounted rotated or upside down; in that case, adjust the flight controller orientation parameters in the firmware.
- The carrier board screws are intended for boards 1.8 mm thick; the M2.5 screws for attaching the Cube to the carrier board are approximately 6–7.55 mm long.
- When fitting the module onto the carrier board, make sure the DF17 connector seats straight and without force.

6.2 microSD Card

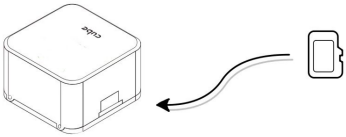

Inserting the microSD card into the Cube module

Insert the microSD card (Class 4 or higher recommended) into the slot on the side of the Cube module. Flight logs (dataflash) are stored on it. **Without a card, ArduPilot will not allow Arm.**

6.3 Power Supply – Power Brick Mini

① Connect the male XT60 connector of the power module to the battery and the female XT60 connector to the power input of the electronic speed controllers and other loads.

② Plug the 6-pin cable from the power module into the **POWER1** connector.

③ A second power module (redundant power and sensing of a second battery) can be connected to **POWER2**.

The Cube powers on as soon as the battery is connected.

6.4 Electronic Speed Controllers (ESC) and Motors

Connect the power (+), ground (−) and signal (S) of each ESC to the **MAIN OUT** outputs according to the motor number for the selected frame type. With the Cube, both the signal and ground wires must be connected. Most ESC faults are caused by incorrect wiring – check that the +5 V wire from the ESC is connected correctly.

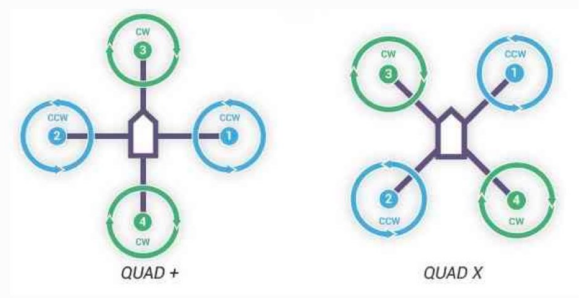

Motor order and direction of rotation for Quad + and Quad X frames (CW – clockwise, CCW – counter-clockwise)

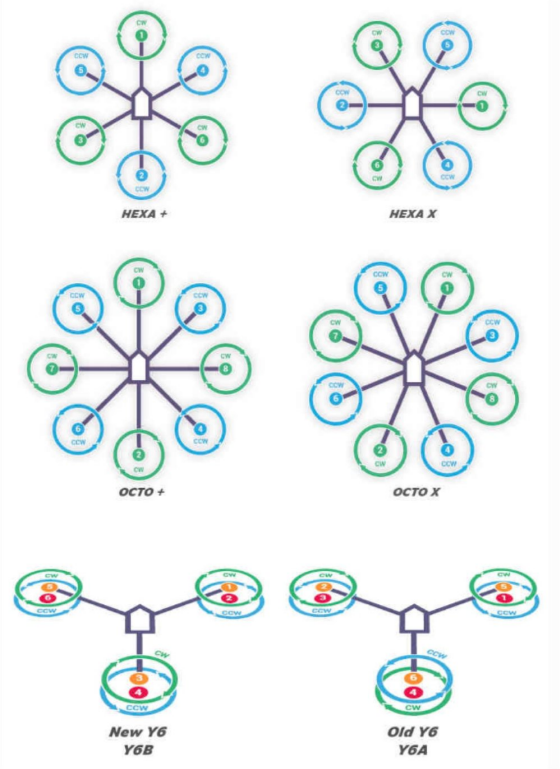

Motor order for Hexa +/X, Octo +/X and Y6 frames

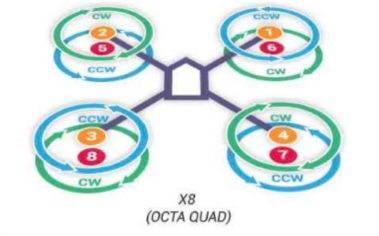

Motor order for the X8 frame (Octa Quad)

- The number at each motor corresponds to the MAIN OUT output; green = CW, blue = CCW.
- The Cube does not power the servo rail. For servos, use an external BEC or an ESC with a 5 V output.
- Only outputs MAIN OUT 1–8 are available on the Mini Carrier Board.

6.5 GPS and Compass

- Connect the GPS module to **GPS1** with the 8-pin cable; most modules work immediately. A module with a compass usually needs to be calibrated.
- Mount the GPS module outside the vehicle, high up, with a clear view of the sky and with the arrow pointing forward – as far as possible from the motors and ESCs, at least 10 cm from power wires and batteries and away from iron objects; a GPS mast is recommended. Twist the power and ground wires where possible.
- Place high-power radio equipment as far as possible from the GPS module – it can interfere with both the compass and GPS reception.

6.6 RC Receiver and Telemetry

- Connect a PPM or S.Bus receiver to **RCIN** and a Spektrum DSM / DSM2 / DSM-X satellite receiver to **SPKT** (on the Mini Carrier Board only after the modification described in 4.6). A receiver with PWM output requires a PPM encoder.
- Connect telemetry (MAVLink protocol, Passthrough or TTL serial interface) to TELEM1 or TELEM2. The default TELEM1 baud rate is 57,600 baud and must match the telemetry. Always check the wire order in the cable.
- An OSD module is connected to TELEM2 with a 6-pin cable.
- Power higher-power peripherals and all radio equipment from a separate source or an external BEC.

6.7 Ground Station and Computer Connection

Mission Planner is used for ArduPilot, **QGroundControl** for PX4. The procedures in this manual describe Mission Planner. Download the MSI installer from ardupilot.org (Mission Planner Installation section); the drivers are installed during the installation as well.

Connection method	Procedure
USB cable	Connect the Cube directly to a USB port of the computer (not via a hub), select the COM port and baud rate (or AUTO), click *Connect*.
USB telemetry	Connect the telemetry module to TELEM1 or TELEM2 and its counterpart to the computer's USB; baud rate 57,600 or AUTO.
Wi-Fi / Ethernet	Via the CubeNode ETH module and a router; in Mission Planner select UDP or TCP, port 14550.
Bluetooth	Bluetooth module (e.g. HC-06) to TELEM1 or TELEM2; baud rate 57,600 or AUTO.

In Windows, Cube Orange+ appears as **two COM ports** (MAVLink and SLCAN); to connect, select the MAVLink port and baud rate 57,600. Update Mission Planner via *Help → Check for Updates*; for drivers, see chapter 7.6.

6.8 Firmware Installation

Cube Orange+ ships with an ArduPilot-compatible bootloader pre-installed, but the autopilot firmware is installed by the user.

① Start Mission Planner; do not connect the Cube to it (firmware cannot be installed while the Cube is connected).

② Connect the Cube with a USB cable and select *Setup → Install Firmware*.

③ Select AUTO or a specific port, baud rate 115,200 and the vehicle type (Copter, Plane, Rover…).

④ Click *Upload Firmware*. Custom firmware can be uploaded from a file without internet access.

※ Always select the firmware for Cube Orange+ (target CubeOrangePlus). Firmware for the older Cube Orange is not interchangeable. If problems appear after an update, revert to an older version.

▶ Secure Firmware

Both the bootloader and the firmware can be signed with an ECC Prime256v1 key pair. Once a signed bootloader is installed, only firmware signed with an authorized key will run; unsigned firmware will not load. Procedure: set up an ArduPilot build environment (Linux or Windows WSL) and a current MAVProxy, generate the keys in Mission Planner (*Setup → Secure → Generate Key*), build the signed bootloader and firmware according to the ArduPilot instructions (Tools/scripts/signing), upload the bootloader via MAVProxy and verify the installation.

※ Failure to follow the secure firmware installation procedure can render the hardware inoperable.

6.9 Accelerometer and Compass Calibration

- **Accelerometer:** *Setup → Mandatory Hardware → Accel Calibration → Calibrate Accel*. Place the vehicle level, on its left side, on its right side, nose down, nose up and on its back in turn, confirming each position with *Click when Done*, until *Calibration successful* is displayed.
- **Level:** vehicle level, *Calibrate Level*, wait for *Completed*.
- **Accelerometer scale:** vehicle level, *Simple Accel Cal*, wait for *Completed*.
- **Compass:** *Setup → Mandatory Hardware → Compass*, set the compass priority with the arrows and click *Start*. Slowly rotate the vehicle so that each side points towards the ground for a moment, until *Success* is displayed with a rising tone. Then restart the Cube – Arm is not possible without a restart. If calibration fails, select a more relaxed *Fitness* setting.

6.10 RC Transmitter, Flight Modes and Servos

- **RC transmitter:** *Setup → Mandatory Hardware → Radio Calibration*. Switch on the RC transmitter, check the link with the receiver, move all sticks and switches to their end positions and confirm.
- **Flight modes:** *Setup → Flight Modes*. Modes are switched with channel 5 (parameter FLTMODE_CH); six modes can be set. Save the settings with the *Save* button.
- **Servos:** *Setup → Mandatory Hardware → Servo Output* – output assignment and range.

Mode	Description
Manual	direct control of control surfaces without stabilization
Stabilize	levels roll and pitch
Training	manual control up to limit bank angles
Acro	holds attitude, no self-levelling
FBWA / FBWB	bank angle follows the stick within limits; FBWB also controls altitude and speed
Cruise	like FBWB, additionally holds heading
Autotune	automatic tuning of control loops
Auto	flies a pre-planned mission
RTL	returns above the take-off point, optionally lands
Loiter	holds altitude and position using GPS
Circle	circles around a point in front of the vehicle
Takeoff	automatic take-off to a set altitude
Avoid ADSB	avoids aircraft based on the ADS-B receiver
Guided	flies to points sent from the ground station
QStabilize / QHover	VTOL: self-levelling / altitude hold
QLoiter / QLand / QRTL	VTOL: position hold / landing / return and landing
QAutotune / QAcro	VTOL: PID tuning / rate control
Thermal	searching for thermal lift (soaring)
Loiter to QLand	descent and transition to QLand

6.11 Electronic Speed Controller Calibration (PWM ESC)

※ Propellers removed, Cube disconnected from the ground station (USB), battery disconnected.

① Switch on the RC transmitter and set the throttle to maximum.

② Connect the battery – the Cube LED cycles red, blue and yellow. Disconnect the battery and, with the throttle still at maximum, reconnect it.

③ Press and hold the safety switch until it lights solid red – the Cube is in ESC calibration mode (red and blue LEDs flash).

④ The ESCs play a tune, a number of beeps according to the cell count and two beeps confirming maximum throttle. Lower the throttle to minimum; a long tone confirms completion.

⑤ Apply a little throttle to check that the motors spin, lower the throttle and disconnect the battery.

6.12 Battery Monitoring and IMU Heating

- **Main battery:** *Setup → Optional Hardware → Battery Monitor* – enter the module type, flight controller and battery capacity. If Mission Planner shows a voltage different from the actual one, calculate a new divider: **new divider = original divider × actual voltage / voltage measured by the module**, write it and restart the Cube.
- **Second battery (POWER2):** in *Config → Full Parameter List* set BATT2_MONITOR = 4 (analog voltage and current), BATT2_VOLT_PIN = 13 and BATT2_CURR_PIN = 4, and enter the capacity and divider as for the main battery. Display on the HUD: *Data* → right-click on the HUD → *User Items* → battery_voltage2.
- **IMU heating:** set the target temperature with parameter BRD_HEAT_TARG; the manufacturer recommends 60 °C. The preheating time depends on the ambient conditions. After warming up, restart the Cube so that IMU data is logged already at operating temperature.

6.13 ADS-B Receiver (Standard Set)

Install Plane or Copter firmware. In *Config → Full Parameter List*, set and write (*Write Params*):

Parameter	Value	Meaning
SERIAL5_BAUD	57	ADS-B receiver port baud rate
SERIAL5_PROTOCOL	1	MAVLink protocol
SR0_ADSB	2	ADS-B data streaming to the ground station
SR1_ADSB or SR2_ADSB	2	streaming via TELEM1 / TELEM2

For alerts and avoidance, set AVD_ENABLE = 1, write, restart the Cube and then set:

Parameter	Recommended	Options
AVD_ENABLE	1	enables ADS-B alerts and avoidance

Parameter	Recommended	Options
AVD_W_ACTION	1	0 off, 1 warning
AVD_F_ACTION	1	response to an imminent collision: 0 none, 1 report, 2 climb/descend, 3 move horizontally, 4 move perpendicularly in 3D, 5 RTL, 6 hover
AVD_F_RCVRY	3	after avoidance: 0 remain in avoidance mode, 1 previous mode, 2 RTL, 3 resume AUTO, otherwise Loiter

6.14 External ADS-B Receiver (Mini Set and Module)

For carrier boards without a built-in receiver, an external receiver (e.g. PingRX or Ping2020) can be used. Orient the antenna vertically. Connect the serial cable to a free serial port and set parameter ADSB_TYPE (in older Mission Planner versions ADSB_ENABLE = 1). On TELEM1/TELEM2, MAVLink is used without further configuration; on GPS2 or CONS, set the MAVLink protocol and 57,600 baud (e.g. SERIAL4_PROTOCOL = 1, SERIAL4_BAUD = 57). After restarting, set streaming SR1_ADSB = 5 (5 Hz). Aircraft within approximately 50 km are then displayed on the Mission Planner map.

6.15 Two GPS Modules (GPS Blending)

For blending two GPS units, only modules that report both position and velocity accuracy can be used, ideally from the same manufacturer. Connect the second module to GPS2 and set SERIAL4_PROTOCOL = 5 (GPS; alternatively TELEM1/TELEM2 via SERIAL1/2_PROTOCOL = 5), GPS_TYPE2 = 1 (AUTO) and GPS_AUTO_SWITCH = 2 (Blend) or 1 (UseBest). On Here modules, the LEDs share the same I2C address, so the LED on GPS2 does not light up.

7. Operation, Maintenance and Troubleshooting

7.1 Pre-Arm Checks and Arm

- Mission Planner includes pre-arm checks that prevent Arm in case of missing calibration, incorrect configuration or bad sensor data. If the vehicle refuses to arm, the reason is shown in the HUD – eliminate it first.
- **Arm** (enabling the motors) from the RC transmitter: throttle down and rudder right for 5 s. Do not hold the rudder right for longer than 15 s – the AutoTrim function will activate. A low tone sounds on Arm.
- **Disarm** (disabling the motors): throttle down and rudder left.
- Arm/Disarm can also be performed from the ground station: in Mission Planner, tab *Actions* → *Arm/Disarm* below the HUD.
- Before flight: fully charged battery, securely attached propellers and connectors, microSD card, valid GPS fix for modes that require it.

7.2 First Flight

- For the first flight, the manufacturer recommends **Stabilize** mode – the throttle is linear and less sensitive.
- Try more advanced modes (AltHold, Loiter) only at a height above 1 m. In these modes, a released throttle stick holds altitude; adding throttle makes the vehicle climb, reducing it makes the vehicle descend.
- Before use, familiarize yourself with the function and behaviour of the individual flight modes.

7.3 LED Indications and Tones (ArduPilot)

LED	Meaning
flashing red and blue	sensor initialization – do not move the vehicle, keep it level
flashing blue	Disarm, no GPS fix (Auto, Loiter, RTL require a fix)
solid blue	Arm, no GPS fix
flashing green	Disarm, ready to Arm, GPS fix; quick double tone on Disarm
fast flashing green	same, GPS uses SBAS – more accurate position
solid green	Arm, GPS fix – ready to fly; long tone on Arm
double flashing yellow	pre-arm checks failed
single flashing yellow	RC transmitter failsafe
flashing yellow	battery failsafe, rapid beeping
flashing yellow and blue	GPS error or failsafe, tones high-high-high-low
flashing red and yellow	EKF / inertial navigation error
flashing purple and yellow	barometer error
solid red	error (SD card, MTD, IMU) – remove and reinsert the card, check BOOT.txt
solid red + SOS tones	microSD card missing or faulty
off	no firmware, SD card missing or incorrectly formatted

7.4 Maintenance and Storage

- Regularly check the connectors, cables and carrier board mounting; a loose connector is a common cause of in-flight failures.
- After flights, download and review the logs from the microSD card – vibration, power, sensor errors. Parameter LOG_DISARMED = 1 ensures logging even before Arm.
- Follow the manufacturer's safety notices (Service Bulletins section on docs.cubepilot.org) and use the current stable firmware.
- Store in a dry place, out of direct sunlight; protect the module from drops and impacts.

7.5 Troubleshooting

Problem	Cause and solution
Cube cannot be armed (Arm)	Read the message in the HUD and eliminate the cause. Check the microSD card, calibrations and the restart after compass calibration. Do not disable the checks.
LED off after power-on	No firmware or SD card – upload firmware (6.8), insert the card.
Solid red + SOS	microSD card missing or faulty – replace it, check BOOT.txt.
Computer does not recognize the Cube	Update Mission Planner and drivers (7.6), use Windows 10 or later, check for two COM ports in Device Manager.
Motor does not respond	Check the ESC signal and ground on MAIN OUT, the motor order and ESC calibration.
Compass calibration fails	Calibrate far from metal; select a more relaxed Fitness; check the GPS placement.
Poor GPS reception	Mount the module higher, further from power wires, ESCs and transmitters.
Inaccurate battery voltage	Recalculate the voltage divider (6.12).
Firmware cannot be uploaded	Disconnect Mission Planner (Disconnect) and try again; if unsuccessful, recover via SWD (7.7).

7.6 USB Drivers in Windows

▶ Driver recovery (Windows 10 and later)

① Disconnect the Cube from USB. Start Mission Planner, press Ctrl+F and click *Driver Clean*.

② Close Mission Planner, download the current drivers from firmware.ardupilot.org (Tools/MissionPlanner) and install them (MSI).

③ Restart the computer and connect the Cube. Device Manager must show two ports: *Cube Orange Mavlink* and *Cube Orange SLCAN*.

▶ Windows 7 (modules with two USB endpoints)

① Connect the Cube, remove “CubePilot CUBE H7/F7” in Device Manager and disconnect the Cube.

② Uninstall and reinstall the latest Cube drivers.

③ When connected, the Cube appears as “CubeOrange-BL” under *Other devices* and should move to *Ports* as “Cube Orange Mavlink (COMx)”.

④ If it does not move, open its *Properties* and on the driver tab verify that it has moved to *Ports* as “Cube Orange SLCAN (COMx)”.

※ The manufacturer strongly recommends running Mission Planner on Windows 10 or later.

7.7 Firmware Recovery via SWD

Recovery is necessary if an update fails or incompatible firmware has been uploaded – the Cube does not appear as a USB device, appears only as a single USB serial device or reports a firmware error. The procedure requires disassembling the carrier board; if you are not sure, contact your dealer.

- You will need: a J-Link programmer (e.g. EDU Mini V2) with an adapter and a 6-pin JST-SUR plug, the J-Link Software and Documentation Pack (segger.com) and the file arducopter_with_bl.hex (or for another vehicle type) for Cube Orange+ from firmware.ardupilot.org.
- Disassembling the carrier board: remove the 4 screws holding the Cube, the 4 screws on the side of the housing and the 4 1.5 mm hex screws on the bottom, press the plastic latches and carefully separate the two parts of the housing.

① Connect the J-Link to the left (FMU) debug port of the carrier board and to the computer's USB.

② Start J-Flash Lite and select **STM32H757XI_M7** as the target device.

③ Connect the Cube to USB (power) and immediately click *Erase Chip*.

④ In *Data File*, open the file arducopter_with_bl.hex and click *Program Device*; check the log output.

⑤ Disconnect both USB and SWD, connect the Cube to USB and verify the connection with Mission Planner and the firmware version. Further updates can then be done via Mission Planner.

8. Information for the EU and Czech Market

8.1 Importer and responsible person in the EU

The product is placed on the European Union market by the importer stated below, who is at the same time the responsible person within the meaning of Article 16 of Regulation (EU) 2023/988 of the European Parliament and of the Council on general product safety (GPSR).

Importer / responsible person in the EU	Rotorama, s.r.o.
Company ID (IČO)	051 57 692
VAT ID (DIČ)	CZ05157692
Registered office	Okrajová 1351, 674 01 Třebíč, Czech Republic
E-mail	info@rotorama.cz
Phone	+420 252 252 098
Website	www.rotorama.com

8.2 Product conformity

CE

- The product bears the **CE** marking and complies with the requirements of the applicable European Union harmonisation legislation.
- A copy of the **EU Declaration of Conformity** is available from the importer at the address stated above or at the e-mail address info@rotorama.cz.
- **Product identification:** the type designation (Cube Orange+; Standard Set model HX4-06222) and the serial number are given on the product or its packaging. Manufacturer: CubePilot Pty Ltd, Australia; the product is made in Taiwan.

8.3 Disposal of electrical equipment



- The crossed-out wheeled bin symbol on the product, its packaging or in the documentation means that at the end of its service life the product **must not be disposed of together with mixed municipal waste**.
- Hand it over at a take-back point for electrical equipment – at a collection yard, at a take-back point of a collective system, or at the retailer when purchasing a new equivalent product. Take-back is free of charge for the end user.
- The obligations under Act No. 542/2020 Coll., on end-of-life products, are fulfilled by the importer through a collective take-back system.
- Proper disposal helps prevent negative impacts on the environment and human health and contributes to the reuse of secondary raw materials.

Through its contractual partner **ASEKOL a.s.**, the company ensures the take-back of waste electrical equipment from households and the separate collection of waste electrical equipment, batteries and accumulators in accordance with the applicable legislation. The customer is entitled to hand over old electrical equipment or a battery or accumulator at any collection point of the above contractual partner. The addresses of these take-back points are listed at www.asekol.cz, www.ecobat.cz and also https://visoh2.mzp.cz/RegistrMistZO/RegistrMistZOPublic/MapaMistZpetOdberu.

9. Warranty and rights arising from defective performance

The rights and obligations of the contracting parties are governed by Czech law, in particular by Act No. 89/2012 Coll., the Civil Code, and Act No. 634/1992 Coll., on consumer protection.

- The seller is liable to the buyer for the product being free of defects on receipt. If the buyer is a consumer, a defect may be notified **within two years of receipt** of the product (Section 2165 of the Civil Code).
- If a defect appears within **one year** of receipt, the product is deemed to have been defective already at the time of receipt (Section 2161(5) of the Civil Code).
- When purchasing online, a consumer has the right to **withdraw from the contract within 14 days** of receiving the goods without giving a reason (Section 1829 of the Civil Code).
- Claims should be made with the retailer from whom you purchased the product. The importer's contact details are given in Chapter 8.1.
- The competent body for out-of-court settlement of consumer disputes is the **Czech Trade Inspection Authority**, Štěpánská 796/44, 110 00 Prague 1, www.coi.cz.