DJI O3/Vista mount

Mount bracket (canopy) for DJI O3 Air Unit and Caddx Vista
for the Happymodel Mobula8 frame



Before installation, read this manual and the manuals for the drone and the video transmitter unit.

Rotorama, s.r.o. · www.rotorama.com

Contents

1. Product description

1.1 What it is for

1.2 Specifications and package contents

2. Installation and use

2.1 Safety

2.2 Installation

2.3 Inspection and maintenance

3. Information for the EU and Czech Market

3.1 Importer and responsible person in the EU

3.2 Disposal

4. Warranty and rights arising from defective performance

1. Product description

1.1 What it is for

The Happymodel DJI O3/Vista mount is a plastic mount bracket (canopy) for the Happymodel Mobula8 frame. It allows a **DJI O3 Air Unit** digital video transmitter or a **Vista** module (Caddx Vista), including its camera, to be mounted on this frame.

The bracket is screwed to the frame in place of the original canopy. The video transmitter unit (VTX) sits in it above the flight controller (FC), and the camera is held in its front section. The manufacturer also supplies the same bracket as part of the Mobula8 O3 drone.



Bracket with a DJI O3 Air Unit on a Happymodel Mobula8 O3 drone (photo: Happymodel)

1.2 Specifications and package contents

Manufacturer	Happymodel (www.happymodel.cn)
Product designation	Mount bracket for Mobula8 O3 (Happymodel DJI O3/Vista mount)
Intended frame	Happymodel Mobula8
Compatible units	DJI O3 Air Unit, Vista (Caddx Vista)
Material	PA (polyamide)
Colour	black
Weight	5 g
Dimensions	68.5 × 68.5 mm, height 20.3 mm
Frame mounting holes	4× Ø 2.5 mm, spacing 43.5 mm
Package contents	1× mount bracket (canopy)

Not included in the package: the DJI O3 Air Unit or Vista module, camera, antennas, frame, flight controller (FC) or any other drone parts. The manufacturer does not list mounting screws among the package contents.

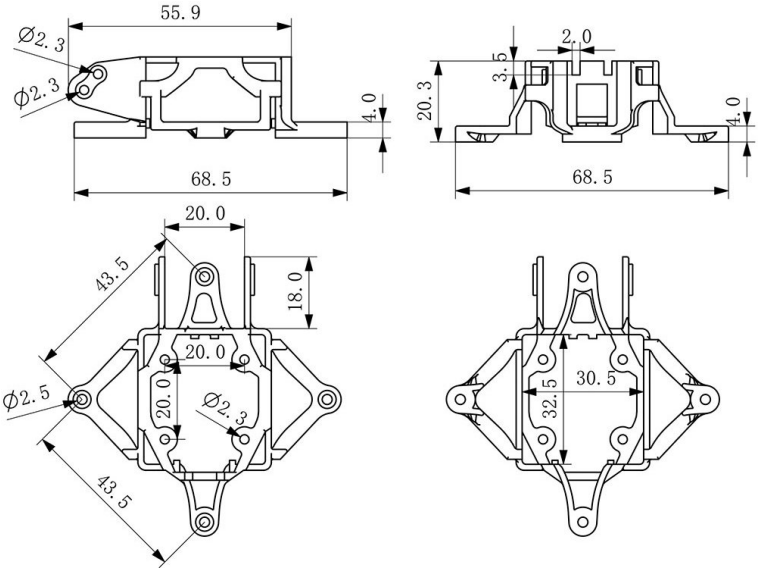

Manufacturer's dimensional drawing (dimensions in mm)

2. Installation and use

2.1 Safety

- Before any work on the drone, **disconnect the battery** and remove the propellers.
- The bracket is intended for the Happymodel Mobula8 frame. The manufacturer does not state compatibility with other frames.
- Tighten the screws with care. Overtightening can damage the plastic part and strip the thread in it.
- Route cables and antennas so that they cannot reach the spinning propellers and are not pinched between the bracket and the frame.
- After every crash, check the bracket for cracks or deformation. Replace a damaged bracket.
- Operation of the drone is subject to the regulations of the country in which you fly. The law of the country in which the product is operated always prevails.

2.2 Installation

① Disconnect the battery and remove the propellers.

② Unscrew the original canopy from the Mobula8 frame.

③ Mount the DJI O3 Air Unit or Vista module in the bracket and insert the camera between the side plates at the front of the bracket. Follow the instructions of the unit manufacturer.

④ Place the bracket on the frame so that its four mounting lugs line up with the holes in the frame, and fasten it with screws.

⑤ Connect the unit to the flight controller (FC) according to the manuals for the drone and the unit. Make sure the cable does not rub against edges and is not pinched.

⑥ Secure the antennas so that they do not reach into the propeller area.

⑦ Fit the propellers, connect the battery and check that video is transmitted and that the camera is held firmly.

2.3 Inspection and maintenance

- Before flying, check that all screws are tight and the bracket does not wobble on the frame.
- Check that the camera does not tilt by itself in the bracket.
- Clean the bracket with a dry or slightly damp cloth; do not use solvents.

3. Information for the EU and Czech Market

3.1 Importer and responsible person in the EU

The product is placed on the European Union market by the importer stated below, who is at the same time the responsible person within the meaning of Article 16 of Regulation (EU) 2023/988 of the European Parliament and of the Council on general product safety (GPSR).

Importer / responsible person in the EU	Rotorama, s.r.o.
Company ID (IČO)	051 57 692
VAT ID (DIČ)	CZ05157692
Registered office	Okrajová 1351, 674 01 Třebíč, Czech Republic
E-mail	info@rotorama.cz
Phone	+420 252 252 098
Website	www.rotorama.com

3.2 Disposal

The bracket is a plastic part without electronics or batteries, so it is not electrical equipment. At the end of its service life, dispose of it as sorted waste in accordance with the rules of the municipality or country in which you live. Sort the packaging according to its material.

Dispose of the video transmitter unit, camera and other drone electronics separately as electrical waste according to the instructions for those products.

4. Warranty and rights arising from defective performance

The rights and obligations of the contracting parties are governed by Czech law, in particular by Act No. 89/2012 Coll., the Civil Code, and Act No. 634/1992 Coll., on consumer protection.

- The seller is liable to the buyer for the product being free of defects on receipt. If the buyer is a consumer, a defect may be notified **within two years of receipt** of the product (Section 2165 of the Civil Code).
- If a defect appears within **one year** of receipt, the product is deemed to have been defective already at the time of receipt (Section 2161(5) of the Civil Code).
- When purchasing online, a consumer has the right to **withdraw from the contract within 14 days** of receiving the goods without giving a reason (Section 1829 of the Civil Code).
- Claims should be made with the retailer from whom you purchased the product. The importer's contact details are given in Chapter 3.1.
- The competent body for out-of-court settlement of consumer disputes is the **Czech Trade Inspection Authority**, Štěpánská 796/44, 110 00 Prague 1, www.coi.cz.