EM3110 900KV

GEPRC – brushless motor
User manual



Read this manual carefully before installation and first use and keep it for future reference.

Rotorama, s.r.o. · www.rotorama.com

Contents

1. Safety instructions

2. Product description

2.1 Intended use

2.2 Package contents

2.3 Specifications

2.4 Dimensions

2.5 Performance data

3. Installation and wiring

3.1 What else you need

3.2 Mounting on the frame

3.3 Connecting to the ESC

3.4 Checking the direction of rotation

3.5 Mounting the propeller

4. Operation and maintenance

5. Information for the EU and Czech Market

6. Warranty and rights arising from defective performance

1. Safety instructions

1.1 Before you start

Read this manual before installation and first use and keep it for future reference. The motor is intended for installation in a radio-controlled model (typically an FPV drone) by a person with basic knowledge of building and flying such models. It is not a toy; keep it away from children.

- Use the motor only with an ESC and power supply matching the specifications in Chapter 2.3.
- Do not make any modifications to the motor that are not described in this manual.
- Do not use a damaged motor (bent shaft, damaged insulation or windings, rough bearings).

1.2 Rotating parts and propellers

- The rotor and propeller spin at very high speed and can cause serious injury. Never reach into the area of rotating parts.
- **Carry out all work on the model – assembly, soldering, configuration and tests in the configurator – with the propellers removed.** Mount the propellers only immediately before flight.
- Before connecting the battery, make sure the model is in the Disarm state (motors off) and that nobody is near the propellers.
- Always tighten the propeller with the supplied nut. A loose propeller may detach in flight and injure people.
- Do not use cracked, bent or otherwise damaged propellers.

1.3 Electrical and thermal hazards

- The motor is designed to be powered from a 6S Li-Po battery via an ESC. Never connect it directly to a battery or any other power source.
- Li-Po batteries may catch fire if short-circuited, overcharged or damaged. Keep the battery disconnected while soldering and wiring, and insulate all joints.
- The motor heats up in operation. Do not touch the bell or windings after a flight or test until it has cooled down.
- Do not overload the motor – do not use propellers larger than permitted in Chapter 2.3 and ensure sufficient cooling.

1.4 Magnets

The rotor contains strong neodymium magnets. Keep the motor away from magnetic cards, mechanical watches and sensitive electronic devices, and protect it from small metal objects (filings, small screws) that may stick to the magnets and damage the windings.

2. Product description

2.1 Intended use

The GEPRC EM3110 900KV is a brushless motor of the EM series, which the manufacturer designed mainly for long-range FPV drones. It is intended for 8–10" propellers and power from a 6S Li-Po battery.

The motor has a 5 mm high-strength steel shaft with an M5 thread, N52H magnets, NSK/NMB bearings and a single-strand winding. It is attached to the frame with four M3 screws on a 19 × 19 mm pattern and connected to the ESC with three wires.



GEPRC EM3110 900KV

2.2 Package contents

Qty	Item
1×	GEPRC EM3110 900KV motor
4×	M3 × 9 mm round head screw
1×	M5 flange nut (anti-slip) for securing the propeller

※ The package does **not** include an electronic speed controller (ESC), propellers, battery, frame or connectors.

2.3 Specifications

Model	GEPRC EM3110 900KV
KV	900 KV
Max. power	1480 W
Peak current	57 A
Interphase resistance	74 mΩ
Recommended propellers	8–10"
Magnets	N52H
Bearings	NSK/NMB
Configuration	12N14P
Dimensions	φ 37.5 × 25 mm
Shaft diameter	5 mm (M5 thread)
Shaft protruding length	15.5 mm
Mounting holes	19 × 19 mm, 4× M3 thread
Leads	310 mm, 18 AWG
Recommended ESC	60–80 A
Input voltage	25.2 V (6S Li-Po)
Winding	single-strand copper
Weight	87.5 g (including leads)

2.4 Dimensions

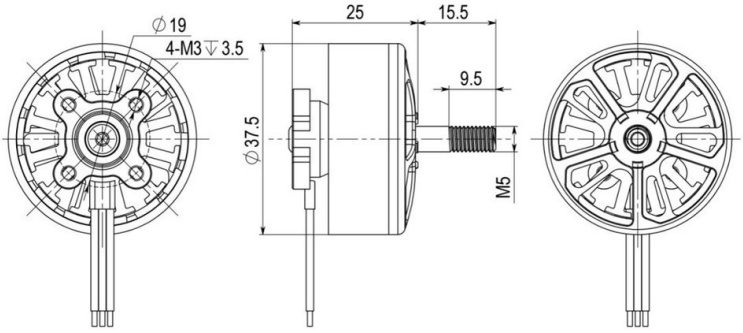

Manufacturer's dimensional drawing (dimensions in mm). Mounting holes 4× M3, thread depth 3.5 mm; M5 shaft thread length 9.5 mm.

2.5 Performance data

The following values were measured and published by the manufacturer with a 6S battery. They are intended as guidance for selecting a propeller and ESC; actual values depend on the battery, ESC, propeller, temperature and other conditions.

▶ HQProp MQ9X4.5 propeller

Voltage (V)	Throttle (%)	Current (A)	Thrust (g)	Power (W)	Efficiency (g/W)
24.1	20	0.18	74	4.4	16.81
24.1	30	1.79	299	43.22	6.92
24.09	40	3.87	556	93.77	5.93
24.08	50	7.92	995	192.36	5.17
24.04	60	14.65	1518	355.24	4.27
23.85	70	23.08	2073	555.19	3.73
23.6	80	34.75	2640	827.21	3.19
23.6	90	36.35	2692	865.24	3.11
23.55	100	38.72	2785	911.85	3.09

Temperature stated by the manufacturer for this measurement set: 72 °C.

▶ Gemfan 1050 propeller

Voltage (V)	Throttle (%)	Current (A)	Thrust (g)	Power (W)	Efficiency (g/W)
24.1	20	0.21	74	5.1	14.50
24.08	30	1.86	327	44.85	7.29
24.07	40	4.98	695	120.95	5.75
24.03	50	11.39	1317	276.73	4.76
24.02	60	20.65	1939	500.13	3.88
23.63	70	32.39	2511	771.9	3.25
23.6	80	45.75	3052	1089.07	2.80
23.41	90	47.7	3132	1120.9	2.79
23.47	100	53.2	3273	1248.6	2.62

Temperature stated by the manufacturer for this measurement set: 87 °C.

3. Installation and wiring

3.1 What else you need

- a frame with 19 × 19 mm motor mounting holes for M3 screws,
- an electronic speed controller (ESC) rated for 60–80 A and 6S,
- 8–10" propellers for a 5 mm shaft,
- a 6S Li-Po battery,
- a soldering iron, solder, heat-shrink tubing and tools for M3 screws and an M5 nut.

3.2 Mounting on the frame

① Place the motor on the frame arm so that the mounting holes in the motor base line up with the holes in the frame and the wires point towards the centre of the frame where the ESC is located.

② Secure the motor with four M3 screws. Choose the screw length according to the thickness of the frame arm (see the warning below); M3 × 9 mm screws are included.

③ Tighten the screws evenly in a crosswise pattern. To prevent loosening due to vibration, you can use a medium-strength threadlocker.

According to the manufacturer's drawing, the thread depth of the mounting holes is 3.5 mm. The screw must not reach deeper into the motor – a screw that is too long will damage the winding and cause a short circuit. After mounting, turn the rotor by hand; it must turn freely without rubbing.

3.3 Connecting to the ESC

① Disconnect the battery. Shorten the motor wires (310 mm) to the required length so that they are not under tension and cannot get into the propeller.

② Strip and tin the wire ends and solder them to the three motor output pads of the ESC. The order of the three wires does not matter – it only determines the direction of rotation.

③ Check that the joints do not touch neighbouring pads and insulate them with heat-shrink tubing if necessary.

④ Secure the wires to the frame arm (with a cable tie or tubing) to prevent chafing and fatigue breakage.

3.4 Checking the direction of rotation

With the propellers removed, connect the battery and in the flight controller (FC) configurator, e.g. Betaflight on the *Motors* tab, briefly spin each motor at low speed. Check that the motor runs smoothly and in the direction that matches the motor layout of your flight controller (FC).

If a motor spins the wrong way, reverse it by swapping any two of the three wires, or in software in the ESC configuration (e.g. in the configurator for the ESC firmware). Repeat the check after the change.

3.5 Mounting the propeller

① Make sure the battery is disconnected or the model is in the Disarm state.

② Fit the propeller matching the direction of rotation of the motor (CW and CCW propellers differ) onto the M5 shaft.

③ Secure the propeller with the supplied M5 flange nut and tighten it firmly.

④ Check that the propeller sits concentrically, does not touch the frame or wires and is oriented with its leading edge in the direction of rotation.

4. Operation and maintenance

4.1 Before every flight

- Check that the motor screws and the propeller nut are tight.
- Turn the rotor by hand – it must turn freely, without rubbing, squeaking or play.
- Check the propellers and the wire insulation.
- Insert a fully charged 6S Li-Po battery into the model (4.20 V/cell, i.e. 25.2 V).
- Do not use LiHV batteries – their fully charged voltage (4.35 V/cell, i.e. 26.1 V) is higher than the input voltage stated by the manufacturer.

4.2 During and after flight

- End the flight at the latest when the battery voltage drops to 3.5 V/cell (21.0 V for 6S).
- After landing, check the motor temperature – carefully, the motors may be hot. A motor noticeably hotter than the others may indicate damage, a wrong propeller or incorrect settings.
- After a crash, check the shaft (bending), the rotor bell and the bearings before flying again.

4.3 Cleaning and storage

- Remove dust, sand and grass with a dry brush or compressed air. Do not wash the motor with water.
- Store the motor in a dry place, away from magnetically sensitive objects. Store the model's battery disconnected at 3.8 V/cell (22.8 V for 6S).

4.4 Troubleshooting

Problem	Possible cause and solution
Motor spins in the wrong direction	Swap two of the three wires or change the direction in the ESC configuration (Chapter 3.4).
Motor does not start, stutters or beeps	Cold or broken solder joint on the ESC, short between pads, damaged wire. Check the soldering and wires; check the ESC settings.
Motor rubs or squeaks	Debris between rotor and stator, damaged bearing or a mounting screw that is too long (Chapter 3.2).
Strong vibrations	Damaged or unbalanced propeller, loose nut, bent shaft. Replace the propeller, tighten the nut, check the shaft.
Motor overheats after flight	Propeller too large, damaged winding or unsuitable ESC or flight controller (FC) filter settings. Use a propeller within the recommended range and check the settings.

5. Information for the EU and Czech Market

5.1 Importer and responsible person in the EU

The product is placed on the European Union market by the importer stated below, who is at the same time the responsible person within the meaning of Article 16 of Regulation (EU) 2023/988 of the European Parliament and of the Council on general product safety (GPSR).

Importer / responsible person in the EU	Rotorama, s.r.o.
Company ID (IČO)	051 57 692
VAT ID (DIČ)	CZ05157692
Registered office	Okrajová 1351, 674 01 Třebíč, Czech Republic
E-mail	info@rotorama.cz
Phone	+420 252 252 098
Website	www.rotorama.com

5.2 Product conformity

CE

- The product bears the **CE** marking and complies with the requirements of the applicable European Union harmonisation legislation.
- A copy of the **EU Declaration of Conformity** is available from the importer at the address stated above or at the e-mail address info@rotorama.cz.
- **Product identification:** the type designation (GEPRC EM3110/900KV) is printed on the motor housing.

5.3 Disposal of electrical equipment



- The crossed-out wheeled bin symbol on the product, its packaging or in the documentation means that at the end of its service life the product **must not be disposed of together with mixed municipal waste**.
- Hand it over at a take-back point for electrical equipment – at a collection yard, at a take-back point of a collective system, or at the retailer when purchasing a new equivalent product. Take-back is free of charge for the end user.
- The obligations under Act No. 542/2020 Coll., on end-of-life products, are fulfilled by the importer through a collective take-back system.
- Proper disposal helps prevent negative impacts on the environment and human health and contributes to the reuse of secondary raw materials.

Through its contractual partner **ASEKOL a.s.**, the company ensures the take-back of waste electrical equipment from households and the separate collection of waste electrical equipment, batteries and accumulators in accordance with the applicable legislation. The customer is entitled to hand over old electrical equipment or a battery or accumulator at any collection point of the above contractual partner. The addresses of these take-back points are listed at www.asekol.cz, www.ecobat.cz and also https://visoh2.mzp.cz/RegistrMistZO/RegistrMistZOPublic/MapaMistZpetOdberu.

6. Warranty and rights arising from defective performance

The rights and obligations of the contracting parties are governed by Czech law, in particular by Act No. 89/2012 Coll., the Civil Code, and Act No. 634/1992 Coll., on consumer protection.

- The seller is liable to the buyer for the product being free of defects on receipt. If the buyer is a consumer, a defect may be notified **within two years of receipt** of the product (Section 2165 of the Civil Code).
- If a defect appears within **one year** of receipt, the product is deemed to have been defective already at the time of receipt (Section 2161(5) of the Civil Code).
- When purchasing online, a consumer has the right to **withdraw from the contract within 14 days** of receiving the goods without giving a reason (Section 1829 of the Civil Code).
- Claims should be made with the retailer from whom you purchased the product. The importer's contact details are given in Chapter 5.1.
- The competent body for out-of-court settlement of consumer disputes is the **Czech Trade Inspection Authority**, Štěpánská 796/44, 110 00 Prague 1, www.coi.cz.