Momoda2 5.8G Dual

GEPRC · 5.8 GHz antenna · RHCP · SMA · 170 mm
User manual



Read this manual before first use and keep it for future reference.

www.rotorama.com

Contents

1. Product description

1.1 What it is for

1.2 Specifications and package contents

2. Use

2.1 Compatibility and polarization

2.2 Mounting on the drone

2.3 Antenna placement

2.4 Care and inspection

3. Information for the EU and Czech Market

3.1 Importer and responsible person in the EU

3.2 Disposal of electrical equipment

4. Warranty and rights arising from defective performance

1. Product description

1.1 What it is for

The **GEPRC Momoda2 5.8G Dual** is an omnidirectional antenna with right-hand circular polarization (RHCP) for video transmission (FPV) in the 5.8 GHz band. It connects via its SMA connector to the video transmitter (VTX) on the drone, or to another 5.8 GHz device with a matching connector.

The antenna contains **two radiating elements** arranged one behind the other. According to the manufacturer, this design increases gain and improves the uniformity of radiation in different drone attitudes. The 170 mm length allows the antenna to be routed above the drone's structure so that the frame, battery and other parts do not shadow the signal – this makes the antenna particularly suitable for long-range drones.



Momoda2 5.8G Dual antenna on a drone (manufacturer's illustration)

1.2 Specifications and package contents

Product designation	GEPRC Momoda2 5.8G DUAL antenna, RHCP, 170 mm
Type	omnidirectional antenna with two radiating elements
Center frequency	5.65 GHz
Frequency band	5.3–6 GHz
Polarization	RHCP (right-hand circular)
Gain	3.8 dBi
Axial ratio	≤ 3
VSWR	≤ 1.43
Radiation efficiency	85 % (average)

Cross-polarization suppression	−25 dB
Length	170 mm + 58 mm (see figure)
Construction	FPC + PCB
Enclosure material	ABS
Connector	SMA with center pin
Weight	16.6 g
Package contents	1× antenna
Not included	video transmitter, adapters, antenna mount, tools

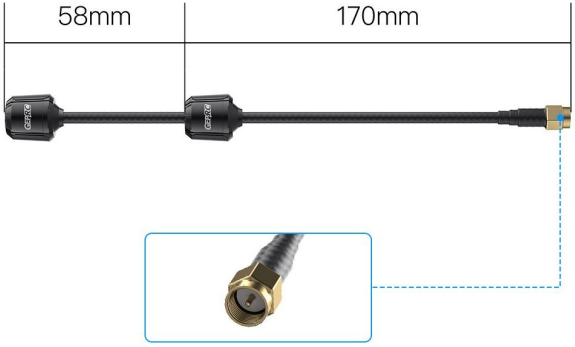

Antenna dimensions and SMA connector detail (manufacturer's illustration)

2. Use

2.1 Compatibility and polarization

- The antenna is designed for the **5.8 GHz** band (5.3–6 GHz). It is not suitable for other bands such as 2.4 GHz or 1.2 GHz.
- The antenna has an **SMA connector with a center pin**. The device it is connected to must have the mating SMA counterpart (external thread, socket in the center). Other connector types (RP-SMA, MMCX, u.FL) require a suitable adapter or pigtail, which are not included.
- **RHCP** polarization: the antennas on both the transmitter and the receiver side (goggles, video receiver) must have the same polarization. Combining RHCP and LHCP causes a significant drop in signal strength and range.

2.2 Mounting on the drone

① Disconnect the drone battery. Never connect or disconnect the antenna while the video transmitter is powered.

② Screw the connector nut by hand onto the connector of the video transmitter (or its pigtail) until it stops. Tighten gently – excessive force or tightening with a wrench may damage the connector.

③ Secure the antenna in a mount on the frame or with a cable tie so that it does not swing in flight and does not transfer stress to the video transmitter connector.

④ Only then connect the battery and switch on the video transmitter.

Never switch on the video transmitter without an antenna connected – it may be permanently damaged.

2.3 Antenna placement

- Place the radiating elements (the cylindrical parts of the antenna) away from the frame, battery and other parts, ideally above them or behind the drone. A carbon frame and metal parts shadow the signal.
- Do not bend the antenna cable at sharp angles and do not cover the radiating elements with metal or carbon.
- The antenna must be clear of the propellers – it must not get into their path even after an impact or due to vibration.
- The frequency and transmit power are determined by the video transmitter, not by the antenna. However, the antenna gain counts towards the radiated power (e.i.r.p.). Observe the regulations of the country in which you operate the drone – the law of that country is decisive.

2.4 Care and inspection

- Before every flight, check that the connector is tight and the antenna is undamaged.
- After a crash, inspect the covers of the radiating elements, the cable and the connector. A cracked cover, kinked cable or loose connector degrades video transmission – replace a damaged antenna.
- Protect the connector from dirt and moisture. Do not store the antenna bent.
- If the video quality or range suddenly deteriorates, first check that the connector is tight, that the polarization (RHCP/LHCP) matches on both sides and whether the antenna is damaged.

3. Information for the EU and Czech Market

3.1 Importer and responsible person in the EU

The product is placed on the European Union market by the importer stated below, who is at the same time the responsible person within the meaning of Article 16 of Regulation (EU) 2023/988 of the European Parliament and of the Council on general product safety (GPSR).

Importer / responsible person in the EU	Rotorama, s.r.o.
Company ID (IČO)	051 57 692
VAT ID (DIČ)	CZ05157692
Registered office	Okrajová 1351, 674 01 Třebíč, Czech Republic
E-mail	info@rotorama.cz
Phone	+420 252 252 098
Website	www.rotorama.com

3.2 Disposal of electrical equipment



- The crossed-out wheeled bin symbol on the product, its packaging or in the documentation means that at the end of its service life the product **must not be disposed of together with mixed municipal waste**.
- Hand it over at a take-back point for electrical equipment – at a collection yard, at a take-back point of a collective system, or at the retailer when purchasing a new equivalent product. Take-back is free of charge for the end user.
- The obligations under Act No. 542/2020 Coll., on end-of-life products, are fulfilled by the importer through a collective take-back system.
- Proper disposal helps prevent negative impacts on the environment and human health and contributes to the reuse of secondary raw materials.

Through its contractual partner **ASEKOL a.s.**, the company ensures the take-back of waste electrical equipment from households and the separate collection of waste electrical equipment, batteries and accumulators in accordance with the applicable legislation. The customer is entitled to hand over old electrical equipment or a battery or accumulator at any collection point of the above contractual partner. The addresses of these take-back points are listed at www.asekol.cz, www.ecobat.cz and also https://visoh2.mzp.cz/RegistrMistZO/RegistrMistZOPublic/MapaMistZpetOdberu.

4. Warranty and rights arising from defective performance

The rights and obligations of the contracting parties are governed by Czech law, in particular by Act No. 89/2012 Coll., the Civil Code, and Act No. 634/1992 Coll., on consumer protection.

- The seller is liable to the buyer for the product being free of defects on receipt. If the buyer is a consumer, a defect may be notified **within two years of receipt** of the product (Section 2165 of the Civil Code).
- If a defect appears within **one year** of receipt, the product is deemed to have been defective already at the time of receipt (Section 2161(5) of the Civil Code).
- When purchasing online, a consumer has the right to **withdraw from the contract within 14 days** of receiving the goods without giving a reason (Section 1829 of the Civil Code).
- Claims should be made with the retailer from whom you purchased the product. The importer's contact details are given in Chapter 3.1.
- The competent body for out-of-court settlement of consumer disputes is the **Czech Trade Inspection Authority**, Štěpánská 796/44, 110 00 Prague 1, www.coi.cz.