ROTORAMA

XING2 1404 3800KV

iFlight · brushless motor for FPV drones
User manual



Read the safety instructions before installation and first power-up. Always carry out tests without propellers.

Importer: Rotorama, s.r.o. · www.rotorama.com

Contents

1. Safety instructions
2. Product description
3. Installation
4. Commissioning
5. Operation and maintenance
6. Troubleshooting
7. Information for the EU and Czech Market
8. Warranty and rights arising from defective performance

1. Safety instructions

1.1 Before you start

The iFlight XING2 1404 3800KV motor is a component for multirotor models (FPV drones). It is not a finished product on its own — it only works together with an electronic speed controller (ESC), a flight controller (FC), a propeller and a battery. Read the entire manual before installation and keep it for future reference.

- This product is not a toy. It is not intended for children or for persons who are not familiar with operating FPV equipment.
- Installation, soldering and commissioning should only be carried out by a person with basic knowledge of electronics and model building.
- Operation of the finished drone is governed by the regulations of the country in which you fly. In the European Union, Regulations (EU) 2019/947 and 2019/945 apply in particular, but national implementing rules differ from country to country (operator registration, zones, insurance). The law of the country in which the product is operated always prevails.

1.2 Rotating parts and propellers

- The motor reaches very high speeds. The rotating bell and propeller can cause serious injuries — cuts and injuries to eyes and fingers.
- **Carry out all bench tests, setup and programming with the propellers removed.**
- Fit the propeller only just before flight, with the battery disconnected.
- Never reach into the propeller area while the battery is connected. The motor may spin up unexpectedly (configuration error, signal loss, malfunction).
- Do not use cracked, bent or otherwise damaged propellers, and do not use a motor with a damaged bell or bent shaft.

1.3 Electrical and thermal hazards

- The motor may only be powered through a suitable electronic speed controller (ESC) for three-phase brushless motors. Never connect it directly to a battery.
- Operate it only within the supply range specified by the manufacturer: **3S–4S LiPo**.
- The motor heats up under load. After flight, do not touch the windings or bell until they have cooled down.
- Solder in a well-ventilated area, on a non-flammable surface and with eye protection.
- Charge and store LiPo batteries according to their manufacturer's instructions, under supervision and away from flammable materials.

2. Product description

2.1 Intended use

XING2 1404 3800KV is an outrunner brushless motor from the iFlight XING2 series. The manufacturer designed it for ultralight toothpick builds; in the Rotorama e-shop it is intended for quadcopters with 2–4" propellers.

The rotor is of the Unibell design, and the motor uses curved N52H magnets and NSK bearings. The motor has three lead wires which are soldered to the electronic speed controller (ESC).



XING2 1404 motor with a propeller fitted (illustrative photo, propeller not included)

2.2 Package contents

Qty	Item
1×	XING2 1404 3800KV motor (Unibell)
4×	M2 × 5 mm screw
4×	M2 × 7 mm screw

※ The package does **not** include a propeller, electronic speed controller (ESC), connector or battery.

2.3 Technical data

Parameter	Value
Manufacturer	iFlight (Huizhou iFlight Intelligent Technology Co., Ltd.)
Designation	XING2 1404 3800KV
KV	3800 rpm/V
Input voltage	3S–4S LiPo
Configuration	9N12P (9 stator coils, 12 magnets)
Stator (diameter × height)	14 × 4 mm
Motor dimensions	Ø 19.9 × 18.4 mm (including shaft)
Weight	9.1 g (including wires)
Shaft diameter	1.5 mm
Shaft protrusion	4 mm
Phase-to-phase resistance	220 mΩ
Peak current	15.84 A
Max. power	253.4 W
Mounting holes	4× M2, 9 × 9 mm (see drawing)
Rotor design	Unibell
Magnets	N52H, curved
Bearings	NSK, Ø 5 × Ø 2 × 2 mm
Winding	single-strand copper wire
Lead wires	120 mm, 26 AWG

Data provided by the manufacturer iFlight.

2.4 Dimensions

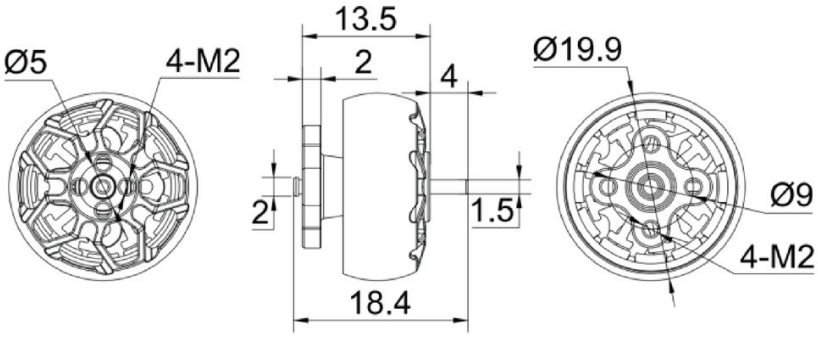

Manufacturer's dimensional drawing (dimensions in mm). Left: view of the bell with 4 M2 holes; centre: side view; right: view of the base with 4 M2 mounting holes.

2.5 Performance data

The manufacturer states the following measured values with a 4030 propeller at 16 V. The motor temperature after 60 s at full throttle was 62 °C. The data is for guidance only — actual values depend on the propeller, battery, ESC and ambient temperature.

Throttle	Voltage	Current	Thrust	Power	Efficiency
50 %	16 V	2.56 A	192 g	40.96 W	4.688 g/W
60 %	16 V	4.41 A	298 g	70.56 W	4.223 g/W
70 %	16 V	7.02 A	381 g	112.32 W	3.392 g/W
80 %	16 V	9.91 A	452 g	158.56 W	2.851 g/W
90 %	16 V	11.51 A	481 g	184.16 W	2.612 g/W
100 %	16 V	15.84 A	512 g	253.44 W	2.020 g/W

Measured by the manufacturer iFlight, 4030 propeller.

3. Installation

3.1 What else you need

- a frame for motors with 4× M2 mounting holes in a pattern matching the motor (section 2.4),
- an electronic speed controller (ESC) for brushless motors, rated for the motor current and for 3S–4S,
- propellers for a 1.5 mm shaft or for screw mounting to the bell, matching the frame size,
- a 3S or 4S LiPo battery — always **fully charged** before flight (3S: 12.6 V, 4S: 16.8 V; 4.20 V/cell),
- a soldering iron with a fine tip, solder, flux, heat-shrink tubing and a hex key for M2 screws.

3.2 Mounting to the frame

① Place the motor on the frame arm so that the mounting holes in the base line up with the holes in the arm and the wires point towards the ESC.

② Select the screws according to the thickness of the arm. The screw must engage the motor base with enough threads, but it **must not protrude into the motor** — it would touch the winding and damage its insulation.

③ Before tightening, turn the bell by hand. The motor must rotate easily and evenly, without rubbing. If it rubs, the screw is too long — replace it with a shorter one.

④ Tighten the screws alternately in a cross pattern and with care. M2 threads strip easily. We recommend securing them with medium-strength threadlocker.

Always check the screw length before powering up for the first time. A short circuit between the winding and a screw or the frame will destroy both the motor and the ESC.

3.3 Connecting to the ESC

① Cut the wires to the required length, leaving a little slack for arm movement. Strip and tin the ends.

② Solder the three motor wires to the three phase pads of the corresponding ESC output. The order of the wires only determines the direction of rotation, which can be changed later (section 4.2).

③ Solder quickly with a sufficiently hot iron so that the insulation does not overheat. The joint must be shiny and solid.

④ Check that adjacent pads are not bridged with solder and that no bare wire can come into contact with a carbon-fibre frame (it is conductive).

⑤ Route the wires along the arm and secure them so that they cannot reach the propeller.

3.4 Fitting the propeller

Fit the propeller only after completing the tests without propellers (chapter 4) and always with the battery disconnected. The shaft has a diameter of 1.5 mm; according to the manufacturer's drawing, the bell has 4× M2 threaded holes for screw-mounted propellers. Propeller screws must not be so long that they touch the winding under the bell.

- Make sure the propeller has the correct direction of rotation (clockwise and counter-clockwise propellers are different).
- The propeller must sit firmly on the shaft or bell without play.

4. Commissioning

4.1 First power-up without propellers

① Remove all propellers.

② When connecting the battery for the first time, use short-circuit protection (a so-called smoke stopper) or a bench power supply with current limiting.

③ Connect the flight controller (FC) to a computer and in the configurator (e.g. Betaflight, *Motors* tab) spin each motor individually at low throttle.

④ The motor must run smoothly, without stuttering or unusual noise.

4.2 Direction of rotation

Check that each motor rotates in the direction that matches the motor layout selected in the flight controller. An incorrect direction can be changed in two ways:

- in software — by reversing the direction of that motor in the ESC configurator,
- in hardware — by swapping any two of the three motor wires.

4.3 Flight controller and ESC setup

- The motor has a 9N12P configuration, i.e. **12 magnetic poles**. If you use RPM-based filtering (RPM filter, bidirectional DShot), set the number of motor poles to 12 in the flight controller.
- Initially leave the ESC settings (timing, PWM frequency) at the defaults recommended by the ESC manufacturer.
- Check that the protocol and failsafe behaviour are set so that the motors stop when the signal is lost.

4.4 Test with propellers

After fitting the propellers, make a short test flight in a safe area. After landing and disconnecting the battery, check the motor temperature. If one motor is significantly warmer than the others, or the motors are very hot after a short flight, stop flying and find the cause (chapter 6).

5. Operation and maintenance

5.1 During operation

- Do not exceed a 4S LiPo supply. End the flight at 3.5 V/cell at the latest (3S: 10.5 V, 4S: 14.0 V).
- Do not use larger propellers than the build is designed for. An oversized propeller overloads the motor and the ESC and leads to overheating.
- After a crash, always check the motor before flying again.

5.2 After every flight

- Disconnect the battery and let the motors cool down.
- Turn the bell by hand — it must rotate freely, without rubbing and without play in the bearings.
- Check that the shaft is not bent and the bell has no cracks or deformation.
- Remove grass, sand and metal debris from the motor (the magnets attract metal dust). Use compressed air or a soft brush.
- Check that the mounting screws are tight and the condition of the wires and solder joints.

5.3 Storage

Store in a dry place, away from moisture and metal dust. Store batteries disconnected, at 3.8 V/cell (3S: 11.4 V, 4S: 15.2 V).

6. Troubleshooting

Problem	Possible cause and solution
Motor does not spin, only twitches or beeps	Broken or cold solder joint on one phase — resolder the joints. Faulty ESC output — try the motor on another output.
Motor spins in the wrong direction	Change the direction in the ESC configurator or swap two wires (section 4.2).
Bell rubs or turns stiffly	Mounting screw too long and touching the winding — use a shorter one. Dirt in the motor — clean it. Bent shaft or damaged bell after a crash.
Motor gets very hot after flight	Propeller too large or voltage above 4S, damaged winding, unsuitable ESC or filter settings. Check the propeller and settings, compare the temperature with the other motors.
Vibration, jello in the video	Damaged or unbalanced propeller, bent shaft, worn bearings, loose motor screws.
Noise, rattling bearings	Worn or dirty bearings — clean the motor; if the noise persists, replace the motor.
Burning smell, damaged winding insulation	Disconnect the battery immediately. Do not use the motor any further — risk of short circuit and damage to the ESC.

7. Information for the EU and Czech Market

7.1 Importer and responsible person in the EU

The product is placed on the European Union market by the importer stated below, who is at the same time the responsible person within the meaning of Article 16 of Regulation (EU) 2023/988 of the European Parliament and of the Council on general product safety (GPSR).

Importer / responsible person in the EU	Rotorama, s.r.o.
Company ID (IČO)	051 57 692
VAT ID (DIČ)	CZ05157692
Registered office	Okrajová 1351, 674 01 Třebíč, Czech Republic
E-mail	info@rotorama.cz
Phone	+420 252 252 098
Website	www.rotorama.com

7.2 Product conformity

CE

- The product bears the **CE** marking and complies with the requirements of the applicable European Union harmonisation legislation.
- A copy of the **EU Declaration of Conformity** is available from the importer at the address stated above or at the e-mail address info@rotorama.cz.
- **Product identification:** the type designation (XING2 1404 3800KV) is printed on the motor bell and on the packaging.

7.3 Disposal of electrical equipment



- The crossed-out wheeled bin symbol on the product, its packaging or in the documentation means that at the end of its service life the product **must not be disposed of together with mixed municipal waste**.
- Hand it over at a take-back point for electrical equipment – at a collection yard, at a take-back point of a collective system, or at the retailer when purchasing a new equivalent product. Take-back is free of charge for the end user.
- The obligations under Act No. 542/2020 Coll., on end-of-life products, are fulfilled by the importer through a collective take-back system.
- Proper disposal helps prevent negative impacts on the environment and human health and contributes to the reuse of secondary raw materials.

Through its contractual partner **ASEKOL a.s.**, the company ensures the take-back of waste electrical equipment from households and the separate collection of waste electrical equipment, batteries and accumulators in accordance with the applicable legislation. The customer is entitled to hand over old electrical equipment or a battery or accumulator at any collection point of the above contractual partner. The addresses of these take-back points are listed at www.asekol.cz, www.ecobat.cz and also https://visoh2.mzp.cz/RegistrMistZO/RegistrMistZOPublic/MapaMistZpetOdberu.

8. Warranty and rights arising from defective performance

The rights and obligations of the contracting parties are governed by Czech law, in particular by Act No. 89/2012 Coll., the Civil Code, and Act No. 634/1992 Coll., on consumer protection.

- The seller is liable to the buyer for the product being free of defects on receipt. If the buyer is a consumer, a defect may be notified **within two years of receipt** of the product (Section 2165 of the Civil Code).
- If a defect appears within **one year** of receipt, the product is deemed to have been defective already at the time of receipt (Section 2161(5) of the Civil Code).
- When purchasing online, a consumer has the right to **withdraw from the contract within 14 days** of receiving the goods without giving a reason (Section 1829 of the Civil Code).
- Claims should be made with the retailer from whom you purchased the product. The importer's contact details are given in Chapter 7.1.
- The competent body for out-of-court settlement of consumer disputes is the **Czech Trade Inspection Authority**, Štěpánská 796/44, 110 00 Prague 1, www.coi.cz.